LAKEWOOD INSTRUMENTS

SINCE 1973

Improving the Environment with Advanced Technology

2017
Catalog and Pricelist

Proud to be the

AWT 2011
pplier of the Year

www.lakewoodinstruments.com

Water Treatment Controllers that Work!

Over 40 Years of Friends, Family And Innovation

Electronic Technologies International, Inc.

Advancing Value Through Results.

Over 20-Years in Business as a Contract Manufacturer for Printed Circuit Boards, Wire Harnessing, and Box Builds.

Electronic Technologies International
is a proud supplier of high-quality electronics to
Lakewood Instruments.

MADE IN THE USA

Electronic Technologies International, Inc
1100 North Main Street • (920)563-0840
Fort Atkinson, WI 53538 • www.etimfg.com

Copyright 2017 © Lakewood Instruments, LLC.
Printed in the USA, Rev A.4

PLACING AN ORDER

Orders may be placed with our Customer Service Department (CSD) by fax, e-mail, or mail. A Purchase Order (PO) or Visa, MasterCard, or Discover may be used to purchase items. To use a PO an established account is required and the PO must be on company letterhead. To establish an account, you will need to fill out a credit application. Payment terms with accounts are net 30 days. Contact us for more details.

Contact us at:
1-800-228-0839
(414) 355-3508 fax
order@lakewoodinstruments.com

Visit our website www.lakewoodinstruments.com to download manuals, cut sheets, and the pricelist/catalog in .PDF format and to download the latest versions of communications interface software.

CANCELELLATIONS AND RETURNS

Order cancellations will not be accepted for items requiring special engineering, custom assembly, or special buy-out parts after order acceptance. Orders for special order pH sensors requiring other than standard glass cannot be canceled after receipt of order because of loss of product due to storage life limitations.

Standard products can be returned for re-stocking subject to a 20% re-stocking charge. All returned goods must be less than one year old in good condition, and unused. Acceptance of return is subject to inspection and final acceptance by the Quality Control Department. Customs and specials will not be accepted for return.

Copyright 2017 © Lakewood Instruments, LLC.
Printed in the USA, Rev A.4

Copyright 2017 © Lakewood Instruments, LLC.
Printed in the USA, Rev A.4

Cooling Tower Controllers

140 Conductivity Controller....10
1520/30e pH/ORP Controller....13
1575e Conductivity Controller....16
1575e Controller Systems....19
TRACE SENSOR KITS....20
NexSys® Control System....22

Nodes

NCON Conductivity Input Node....25
NpH pH/ORP Input Node....25
NDIG Digital Input Node....25
N420I 4-20 mA Input Node....25
NRLY Relay Node....26
NCKT Conductivity Node and Sensor For M/U....26
PS +24VDC Power Supply....26

Communications Accessories

EZWEB Wireless....27
Interface, Bacnet, DAC-633E....27

Cooling Tower Accessories and Replacement Parts

Replacement Plumbing Parts

O-Rings....28
Blue Locking Ring Replacement Kit....28
Reed Switch....28
Reed Switch 20 ft....28
Flow Floats....28
Flow Sights....29

Cooling Water Sensors

2-Elect Conductivity Sensor 20 ft....29
2-Elect Conductivity Sensor....29
4-Elect Conductivity Sensor....29
4-Elect Conductivity Sensor 20 ft....29
2-Elect Conductivity Sensor 2 ft Body....29
2-Elect Conductivity Sensor 4 ft Body....29
pH Sensor Combination NexSys®....30
ORP Sensor NexSys®....30
pH Sensor Combination 15 ft....30
ORP Combination....30
pH Combination....30

Copyright 2017 © Lakewood Instruments, LLC.
Printed in the USA, Rev A.4

ORP Sensor....30
pH Glass Sensor....31
pH Reference Sensor....31
Remote RTD Input....31
8042 KCL Refill Kit....31

Plumbing Assembles (some used on more than one model)

Flo-Tektor....31
Plumbing 100....32
Plumbing FS....32
Plumbing FS 20 Ft....32
Plumbing FS 20 Ft Right Exit....32
Plumbing Tee....32
Plumbing 2330/2350....32
Plumbing 330/350....33
Plumbing 2412/2430....33
Plumbing 412....33
Plumbing 420....33
Plumbing SE....33
Plumbing 1400....33
Plumbing 1400/N4....34
Plumbing 1400 COR W/90˚ Bend....34
Plumbing 1400 COR W/0˚ Bend....34
Plumbing 1520/1530e/2330e/2350e/NexSys®....34
Plumbing 1512e/2412e/2430e/NexSys®....34
Plumbing 2400e/2800e/NexSys® For pH, Conductivity, and ORP....34
Plumbing 2000e/ NexSys® For pH and ORP....35

Controller Accessories

DS Drum Switch....35
pH/ORP Transmitter....35
Conductivity Transmitter....35
pH/ORP Simulator....35
EZ Service Kit....36
pH/ORP Preamplifier....36
Conductivity Preamplifier....36
EchoPod DL10....37

Copyright 2017 © Lakewood Instruments, LLC.
Printed in the USA, Rev A.4

Miscellaneous Plumbing Accessories

9050 Corrosion Coupon Pack....40
Coupon Holder....40
9102 Sample Shutoff Assembley....40
9160 Corporation Stop....41
9176 Chemical Injection Manifold....41
95 Series Sprite Motorized Ball Valves....42
Sprite XT Series Motorized Ball Valves....44
9500 Series Bleed-Off Valves....45
9600 Series WYE Strainer....46

Water Meters

Autotrol Turbine Meters and Sensor Cables....48
1TM-NPT 1" Turbine With Stainless Steel NPT Fittings....50
1TM-ESW 1" Turbine With Solvent Weld Fittings....50
2TM-NPT 2" Turbine With Stainless Steel NPT Fittings....50
1TM-ESW 2" Turbine With Solvent Weld Fittings....50
49C25 Sensor Cable With 25 Ft Length....50
49C50 Sensor Cable With 50 Ft Length....50
MRS Series Water Meters....52
MJR Series Water Meters....54
WTC Series Water Meters....56

Condensate Controllers

1575e Conductivity Condensate Controller....58
1520e pH Condensate Controller....60

Boiler Controllers

150 Single Boiler Conductivity Controller....63
1575e Single Boiler Conductivity Controller....65

NexSys® Boiler Control System....68

Boiler Accessories And Replacement Parts

Boiler Conductivity Sensors

SR2 Two-Electrode Sensor With Cable....72
SR2T Two-Electrode Sensor With Cable And Cross....72
SR2N Two-Electrode Sensor With Node....72
SR2HD Two-Electrode Sensor With Cable Harsh Duty....73
SR2NHD Two-Electrode Sensor With Node Harsh Duty....73
SR2P Two-Electrode Sensor With Preamplifier....73

Copyright 2017 © Lakewood Instruments, LLC.
Printed in the USA, Rev A.4

SR4 Four-Electrode Sensor With Cable....74
SR4N Four-Electrode Sensor With Cable....74
SR4P Four-Electrode Sensor With Cable....74
Replacement 4-Elect Boiler Sensor....75
Replacement 2-Elect Boiler Sensor....75
Replacement 2-Elect Boiler Sensor Harsh Duty....75

Boiler Plumbing And Valve Accessories

PLKT Kit 1/2" Sample/Cylce Or Continuous Sample....76
PL5 Assembly 1/2" Sample/Cycle....76
PL575 Assembly 3/4" Sample/Cycle....76
PL6 Assembly 1/2" Continuous Sample....76
PL675 Assembly 3/4" Continuous Sample....76
GV Globe Valve w/Position Indicator....77
GVN Globe Valve w/o Position Indicator....77
Orifice Plates....77
Orifice Unions....77
MBV-1 Motorized Ball Valve 1/2"....78
MBV-2 Motorized Ball Valve 3/4"....78

Process Controllers

1520/30e Process pH Or ORP Controller....81

Process Sensors

520 Series Process pH Senors....84
530 Series Process pH ORP Senors....89
540 Series Process Conductivity Senors....93
543 Series Process Conductivity Senors....97

Chemical Feed Pumps

PULSAtron And Chem-Tech Pumps....104

Domestic Equipment Warranty....144

Copyright 2017 © Lakewood Instruments, LLC.
Printed in the USA, Rev A.4

Cooling Tower Controllers

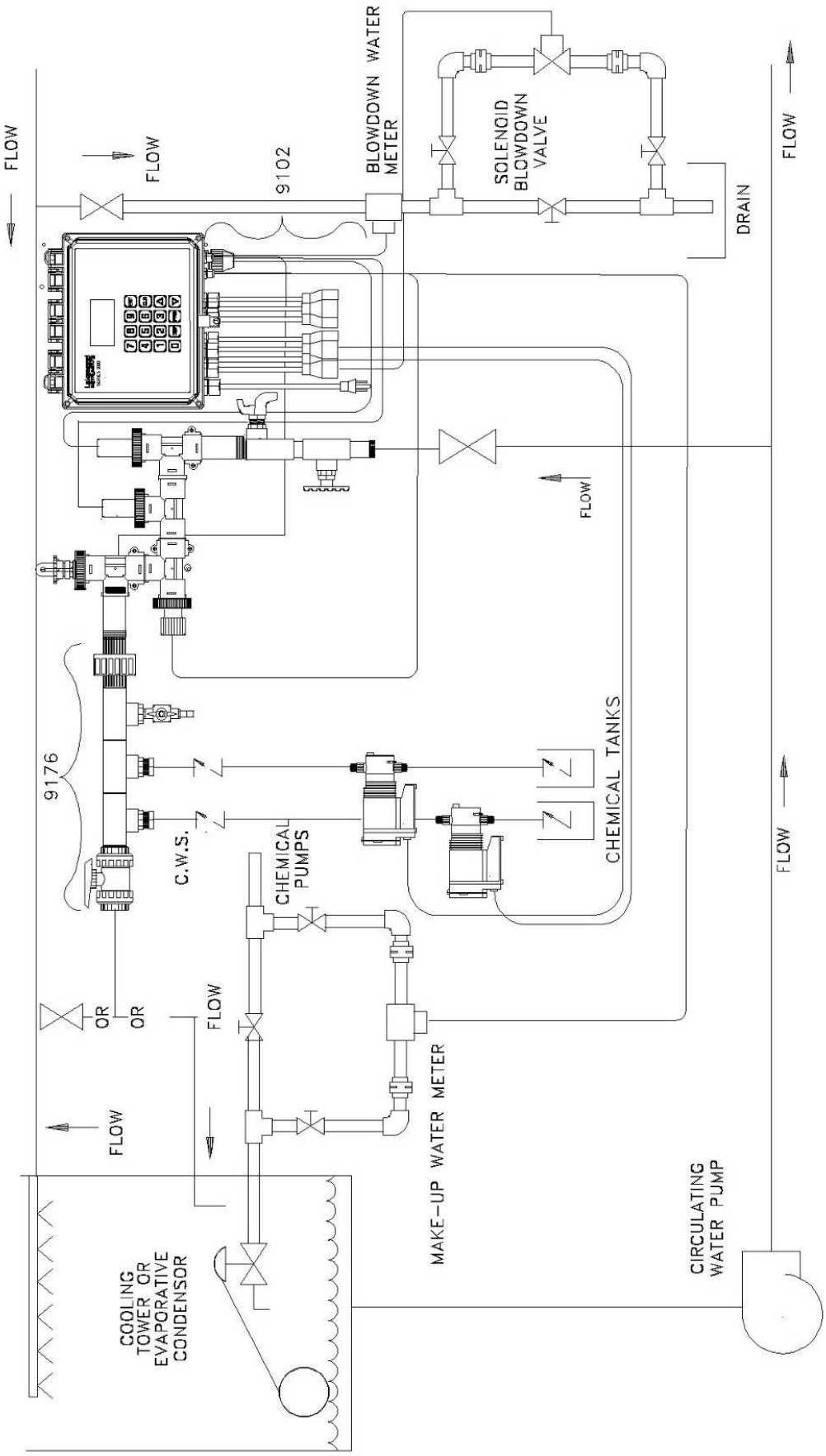

Copyright 2017 © Lakewood Instruments, LLC.
Printed in the USA, Rev A.4

Model 140 Water Treatment Controller

The Model 140 uses the latest in microprocessor capability, giving the user a high level of application flexibility. Multiple inputs and very easy setup characterize this new technology. Water meters, sensors and plumbing assemblies are purchased separatley.

PART NUMBER 1239597 SHOWN
Cooling Tower Water Treatment Controller W/Sensor and Flow Switch Plumbing on a Mounting Plate.

FEATURES

- Use this Controller for cooling towers.
- Removable power cord and receptacles for simple conduit installations.
- Scheduled feed, which can use two relays for biocides or other chemicals.
- One (1) water meter input, conductivity input, flow switch input, and 4-20 mA output are all standard features.
- Designed with a single circuit board for better reliability and lower cost.
- Large open shallow enclosure, for easy wiring.
- The enclosure is rated NEMA 4X.
- Power selector switch for 115 or 230 vac operation.
- Heavy-duty stainless steel domed numeric keypad and graphical display allow for quick and easy programming. Steel domed switches improve the tactile sensing and life expectancy of the keypad.
- LED indicators for power, flow status, alarm and relay status.

BENEFITS

- Easy to program with the Lakewood plain English, intuitive, and user friendly menu interface.
- Single circuit board design improves reliability.
- No add-on options. 4-20 mA output and biocide features are standard.
- Multiple methods of chemical feed for application flexibility.

SPECIFICATIONS

Conductivity Range	0-10,000 µS
Conductivity Sensor	2 Electrode
Conductivity Resolution	± 10 µS
Temperature Comp.	500 ohm NTC
Accuracy & Repeatability	± 1.0%
Deadband/Setpoint	Adjustable
Auto/Manual Outputs	Menu Selectable
Keypad	16 Tactile Push-Buttons
Display	16 X 2 Character

Water Meter Input	Contact Head, Paddle Wheel Or Turbine
Timer	Max. Blowdown Time Exceeded, relay time exceeded

Output Signal	One 4 - 20 mA, Isolated or Non-Isolated Optionally Powered
Output Relays	2 Selectable Use, 1 Blowdown
Relay Ratings	3A each, 10A Total
Power	120/240 VAC 50/60 Hz
Ambient	32° - 120°F (0-49°C)
Enclosure	NEMA 4X, ETL

Intertek

Sensors/Plumbing	**Cooling Tower**
Max Pressure	140 psi (9.65 bar)@ 100°F
Max Temp	140°F (60° C)
Min Flow	1 gpm (3.785 Lpm)

Copyright 2017 © Lakewood Instruments, LLC.
Printed in the USA, Rev A.4

Ordering Options

Controller Options

1239594 Cooling Tower Water Treatment Controller Only. (No Sensor or Plumbing).

1239595 Cooling Tower Water Treatment Controller, Including Sensor Tee and Conductivity Sensor.

1239596 Cooling Tower Water Treatment Controller, Including Left Exit Flow Switch Plumbing and Conductivity Sensor.

1269226 Cooling Tower Water Treatment Controller, Including Right Exit Flow Switch Plumbing and Conductivity Sensor.

1239597 Cooling Tower Water Treatment Controller, Including Left Exit Flow Switch Plumbing and Conductivity Sensor on a Mounting Plate (12 X 21).

1269418 Cooling Tower Water Treatment Controller, Including Right Exit Flow Switch Plumbing and Conductivity Sensor on a Mounting Plate (12 X 21).

Cooling Tower Options

1107003 Cooling Tower Flow Switch Plumbing

1167214 Cooling Tower Sensor Tee

1167158 Cooling Tower Sensor with 20 ft cable

PART # 1269418 with Right Exit Plumbing Assembly

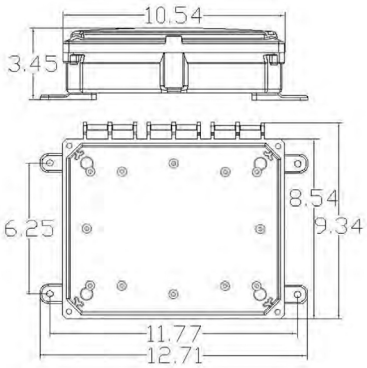

Copyright 2017 © Lakewood Instruments, LLC.
Printed in the USA, Rev A.4

MODEL 140

PART NO.	CONDUCTIVITY CONTROLLER TOWER ONLY	LIST	CD
1239594	140 Controller only, no sensor or plumbing	**$778**	**W**

PART NO.	CONDUCTIVITY CONTROLLER SYSTEMS	LIST	CD
	The Following Systems Include Sensor and Plumbing Assemblies		
1239595	140 with cooling tower sensor tee and sensor	$923	W
1239596	140 with cooling tower Left Exit flowswitch and sensor	$995	W
1269226	140 with cooling tower Right Exit flowswitch and sensor	$995	W
1239597	140 with cooling tower Left Exit FS and sensor on mounting plate	$1,159	W
1269418	140 with cooling tower Right Exit FS and sensor on mounting plate	$1,159	W

PART NO.	COOLING TOWER COMPONENTS	LIST	CD
1167158	Sensor, Conductivity 2 elec w/20 ft Cable	$263	W
1167157	Sensor, Conductivity 2 elec w/2 ft Cable	$226	W
1169207	Sensor, Conductivity, 2 elec 4ft body w/20 ft cable	$295	W
1167214	Plumbing, tee, 3/4 inch NPT	$102	R
1107003	Plumbing, with 20' FS, remote plumbing Left Exit	$208	R
1230562	Plumbing, with 20' FS, remote plumbing Right Exit	$208	R

PART NO.	REPLACEMENT PARTS	LIST	CD
1269534	Kit, O-Ring, 1166418, for sensor and/or flow sight, set of 10	$15	R
1269533	Kit, Blue Ring replacement, 1169740, set of two	$62	R
1107004	Reed Switch w/20 ft of cable	$66	R
1167235	Reed Switch w/36 in. of cable for use with Mounting Plate	$42	R
1269596	Kit, Flow Sight, 1167266, set of five	$82	R
1269595	Kit, Flow Float, 1167234, set of five	$92	R
1107003	Plumbing, with 20' FS, remote plumbing Left Exit	$208	R
1230562	Plumbing, with 20' FS, remote plumbing Right Exit	$208	R
1269006	Lubricant Pack, Silicone, set of 20	$15	R

Copyright 2017 © Lakewood Instruments, LLC.
Printed in the USA, Rev A.4

MODEL 1520/30e pH or ORP WATER TREATMENT CONTROLLER

The Model 1520/30e uses the latest in microprocessor capability, giving the user a high level of application flexibility in pH or ORP control. The user in the field can configure this controller to operate as a pH or an ORP controller. A large illuminated graphics screen, multiple inputs, and very easy setup characterize this new technology. Water meters, sensors and plumbing assemblies are purchased separately.

PART NUMBER 1240518 SHOWN

Cooling Tower Water Treatent Controller With Flow Switch Plumbing And ph Sensor On A PVC Mounting Plate.

FEATURES

- Removable power cord and receptacles for simple conduit installations.
- Scheduled feed, which can use three relays for biocides or other chemicals.
- Two (2) water meter inputs, two (2) drum switch inputs, pH or ORP input, flow switch input, and 4-20 mA output are all standard features.
- A 4-20 mA Input for remote pH or ORP applications can be used in place of the standard pH or ORP input.
- Designed with a single circuit board for better reliability and lower cost.
- Large open shallow enclosure for easy wiring.
- Heavy-duty stainless steel domed numeric keypad and illuminated graphical display allow for quick and easy programming. Steel domed switches improve the tactile sensing and life expectancy of the keypad.
- LED indicators for power, alarm and relay status.

BENEFITS

- Easy to program with the Lakewood plain English, intuitive, and user friendly menu interface.
- Controller can be removed from a cooling tower and be placed in another type of application when used with the appropriate pH or ORP sensor.
- Single circuit board design improves reliability.
- No add-on options. 4-20 mA output and biocide features are standard.

SPECIFICATIONS

pH range	2-12 pH
ORP range	-1000 to +1000 mV
Sensor Types	Solution ground, Signal differential, or Single-Ended
Resolution	±.10pHor1mV
Accuracy & repeatability	± 1.0%
Deadband/Setpoint	Adjustable
Auto/Manual outputs	Menu selectable
Keypad	16 tactile push-buttons
Display	Illuminated 128x64 pixel LCD
Drum Switch Inputs	2 digital contact inputs
Water meter inputs (2)	Contact head, paddle wheel or turbine

Timer	Relay run time exceeded
Output Signal	One 4 – 20 mA, non-isolated isolated powered output
Output relays	4 Selectable Use
Relay ratings	3A each, 10A total.
Power	120/240 VAC 50/60 Hz
Ambient	32˚ - 120˚F (0-49˚C)
Enclosure	NEMA 4X, ETL

Intertek

Sensors/Plumbing	Cooling Tower
Max Pressure	140 psi (9.65 bar)@ 100°F
Max Temp	140°F (60° C)
Min Flow	1 gpm (3.785 Lpm)

Copyright 2017 © Lakewood Instruments, LLC.
Printed in the USA, Rev A.4

Ordering Options

Controller Options

1240475 Model 1520/30e Controller Only. (No Sensor or Plumbing).

1240476 Model 1520e Cooling Tower Water Treatment pH Controller, Including pH Sensor and Flowswitch Plumbing Assembly.

1240518 Model 1520e Cooling Tower Water Treatment pH Controller, including pH Sensor and Flowswitch Plumbing Assembly on a Mounting Plate (12 X 21).

1263418 Model 1530e Cooling Tower Water Treatment ORP Controller, Including ORP Sensor and Flowswitch Plumbing Assembly.

1240519 Model 1530e Cooling Tower Water Treatment ORP Controller, Including ORP Sensor and Flowswitch Plumbing Assembly on a Mounting Plate (12 X 21).

Cooling Tower Options

1240477 Cooling Tower Flow Switch Plumbing Assembly

1240472 Cooling Tower pH Sensor With 15 Ft Cable

1240473 Cooling Tower ORP Sensor With 15 Ft Cable

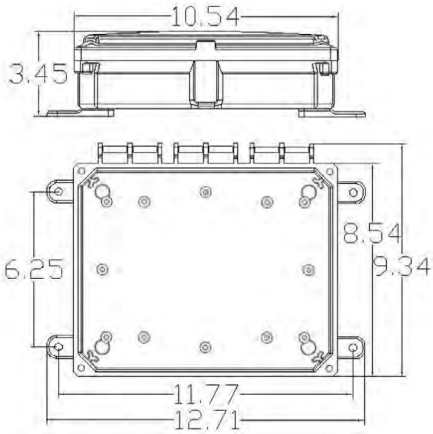

Copyright 2017 © Lakewood Instruments, LLC.
Printed in the USA, Rev A.4

MODEL 1520/30e

PART NO.	pH/ORP COOLING TOWER CONTROLLER ONLY	LIST	CD
1240475	1520/30e controller only, no sensor or plumbing	**$1,225**	**W**

PART NO.	pH COOLING TOWER CONTROLLER SYSTEMS	LIST	CD
	The Following Systems Include Sensor and Plumbing Assemblies		
1240476	1520e with cooling tower flowswitch and pH sensor, Left Exit	$1,877	W
1269454	1520e with cooling tower flowswitch and pH sensor, Right Exit	$1,877	W
1240518	1520e with cooling tower FS and pH sensor on mounting plate	$2,005	W

PART NO.	ORP COOLING TOWER CONTROLLER SYSTEMS	LIST	CD
	The Following Systems Include Sensor and Plumbing Assemblies		
1263418	1530e with cooling tower flowswitch and ORP sensor	$1,877	W
1240519	1530e with cooling tower FS and ORP sensor on mounting plate	$2,005	W

PART NO.	pH and ORP COOLING TOWER COMPONENTS	LIST	CD
1240472	Sensor, pH 1520e, 2350e, 2412e w/15 ft of cable	$469	R
1240473	Sensor, ORP 1530e, 2330e, 2430e w/15 ft of cable	$469	R
1240477	Plumbing, 1520/30e, 2330e, 2350e, NexSys® w/ 20ft flow switch	$216	R
1269193	pH/ORP transmitter	$368	R
1269455	Plumb,1520/30e,w/fs, Right Exit	$216	R

PART NO.	REPLACEMENT PARTS	LIST	CD
1269534	Kit, O-Ring, 1166418, for sensor and/or flow sight, set of 10	$15	R
1269533	Kit, Blue Ring replacement, 1169740, set of two	$62	R
1107004	Reed Switch w/20 ft of cable	$66	R
1167235	Reed Switch w/36 in. of cable for use with Mounting Plate	$42	R
1269596	Kit, Flow Sight, 1167266, set of five	$82	R
1269595	Kit, Flow Float, 1167234, set of five	$92	R
1240477	Plumbing, 1520/30e, 2330e, 2350e, NexSys® w/ 20ft flow switch	$216	R
1269006	Lubricant Pack, Silicone, set of 20	$15	R
1269455	Plumb,1520/30e,w/fs, Right Exit	$216	R

Copyright 2017 © Lakewood Instruments, LLC.
Printed in the USA, Rev A.4

MODEL 1575e WATER TREATMENT CONTROLLER

The Model 1575e uses the latest in microprocessor capability, giving the user a high level of application flexibility. A large illuminated graphics screen, multiple inputs, and very easy setup characterize this new technology. The Model 1575e is ETL approved.

PART NUMBER 1229242 SHOWN
Cooling Tower Water Treatment Controller, Including Flow Switch Plumbing And Conductivity Sensor On A Mounting Plate

FEATURES

- Removable power cord and receptacles for simple conduit installations.
- Scheduled feed, which can use three relays for biocides or other chemicals.
- Two (2) water meter inputs, two (2) drum switch inputs, conductivity input, a flow switch input, a 4-20 mA output, and a 4-20 mA input are all standard features.
- The 4-20 mA input can be used with a transmitter for one of the following: remote conductivity, makeup conductivity, pH, ORP, percent, pressure, milliamps, flow rates, or traced chemistry control. This transmitter can be added in the field.
- Designed with a single circuit board for better reliability and lower cost.
- Large open shallow enclosure for easy wiring.
- Ball valve delay feature allows accurate control of motorized ball valves.
- Heavy-duty stainless steel domed numeric keypad and illuminated graphical display allow for quick and easy programming. Steel domed switches improve the tactile sensing and life expectancy of the keypad.
- LED indicators for power, alarm and relay status.

BENEFITS

- Easy to program with the Lakewood plain English, intuitive, and user friendly menu interface.
- Controller can be used in boiler, cooling tower, or condensate applications when used with the appropriate conductivity sensor.
- Single circuit board design improves reliability.
- No add-on options. 4-20 mA output and feed schedule clock features are standard.

SPECIFICATIONS

Conductivity range	50-10,000 µS
Conductivity sensor	2 electrode
Conductivity Resolution	± 10 µS (conductivity <5000 µS) ±100 µS(conductivity > 5000 µS)
Temperature comp.	500NTC, NONE
Accuracy & repeatability	± 1.0%
Deadband/Setpoint	Programmable
Auto/Manual outputs	Menu selectable
Keypad	16 tactile push-buttons
Display	illuminated 128x64 pixel LCD
Drum Switch Inputs	2 digital contact inputs
Water meter inputs (2)	Contact head, paddle wheel, or turbine
Timers	Max. blowdown time exceeded and relay run time exceeded
Output Signal	One 4 – 20 mA, isolated or non-isolated optionally powered output for conductivity
Input Signal	One 4-20 mA, non- isolated internally powered input for conductivity
Output relays	4, 3 selectable use, 1 blowdown
Relay ratings	3A each, 10A total
Power	120/240 VAC 50/60 Hz
Ambient	32° - 120°F (0 - 49°C)
Enclosure	NEMA 4X, ETL

Intertek

Sensors/Plumbing	Cooling Tower
Max Pressure	140 psi (9.65 bar)@ 100°F
Max Temp	140°F (60° C)
Min Flow	1 gpm (3.785 Lpm)

Copyright 2017 © Lakewood Instruments, LLC.
Printed in the USA, Rev A.4

Ordering Options

Controller Options

1229239 Model 1575e Conductivity Controller Only. (No Sensor or Plumbing).

1229240 Model 1575e Cooling Tower Water Treatment Conductivity Controller, Including Conductivity Sensor and Sensor Tee.

1229241 Model 1575e Cooling Tower Water Treatment Conductivity Controller, Including Conductivity Sensor and Left Exit Flowswitch Plumbing Assembly.

1230563 Model 1575e Cooling Tower Water Treatment Conductivity Controller, Including Conductivity Sensor and Right Exit Flowswitch Plumbing Assembly.

1229242 Model 1575e Cooling Tower Water Treatment Conductivity Controller, Including Conductivity Sensor and Left Exit Flowswitch Plumbing Assembly on a Mounting Plate (12 X 21 in.).

1269417 Model 1575e Cooling Tower Water Treatment Conductivity Controller, Including Conductivity Sensor and Right Exit Flowswitch Plumbing Assembly on a Mounting Plate (12 X 21 in.).

Cooling Tower Options

1107003 Cooling Tower Flow Switch Plumbing

1167214 Cooling Tower Plumbing Tee

1167158 Cooling Tower sensor With 20 ft cable

PART # 1269417 with Right Exit Plumbing Assembly

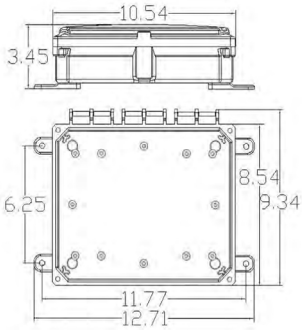

Copyright 2017 © Lakewood Instruments, LLC.
Printed in the USA, Rev A.4

MODEL 1575e

PART NO.	CONDUCTIVITY COOLING TOWER CONTROLLER ONLY	LIST	CD
1229239	1575e controller only, no sensor or plumbing	**$1,075**	**W**

PART NO.	CONDUCTIVITY COOLING TOWER CONTROLLER SYSTEMS	LIST	CD
	The Following Systems Include Sensor and Plumbing Assemblies		
1229240	1575e with cooling tower sensor tee and sensor	$1,409	W
1229241	1575e with cooling tower Left Exit flowswitch and sensor	$1,496	W
1230563	1575e with cooling tower Right Exit flowswitch and sensor	$1,496	W
1229242	1575e with cooling tower Left Exit FS and sensor on mounting plate	$1,623	W
1269417	1575e with cooling tower Right Exit FS and sensor on mounting plate	$1,623	W
1269338	1575e with cooling tower sensor, flow switch, and Trace Sensor Kit on a mounting plate	$4,091	W

PART NO.	CONDUCTIVITY COOLING TOWER COMPONENTS	LIST	CD
1167158	Sensor, Conductivity 2 elec w/20 ft Cable	$263	W
1167157	Sensor, Conductivity 2 elec w/2 ft Cable	$226	W
1169207	Sensor, Conductivity, 2 elec 4ft body w/20 ft cable	$295	W
1167214	Plumbing, tee, 3/4 inch NPT	$102	R
1107003	Plumbing, with 20' FS, remote plumbing Left Exit	$208	R
1230562	Plumbing, with 20' FS, remote plumbing Right Exit	$208	R
1269378	Kit, pH, Retrofit, includes isolation kit, pH sensor, and tee	$1,109	R
1269387	Kit, ORP, Retrofit, includes isolation kit, ORP sensor, and tee	$1,109	R

PART NO.	REPLACEMENT PARTS	LIST	CD
1269534	Kit, O-Ring, 1166418, for sensor and/or flow sight, set of 10	$15	R
1269533	Kit, Blue Ring replacement, 1169740, set of two	$62	R
1107004	Reed Switch w/20 ft of cable	$66	R
1167235	Reed Switch w/36 in. of cable for use with Mounting Plate	$42	R
1269596	Kit, Flow Sight, 1167266, set of five	$82	R
1269595	Kit, Flow Float, 1167234, set of five	$92	R
1107003	Plumbing, with 20' FS, remote plumbing Left Exit	$208	R
1230562	Plumbing, with 20' FS, remote plumbing Right Exit	$208	R
1269006	Lubricant Pack, Silicone, set of 20	$15	R

Copyright 2017 © Lakewood Instruments, LLC.
Printed in the USA, Rev A.4

LAKEWOOD INSTRUMENTS MODEL 1575e CONTROLLER SYSTEMS

The Model 1575e uses the latest in microprocessor capability, giving the user a high level of application flexibility. A large illuminated graphics screen, multiple inputs, and very easy setup characterize this new technology. One of these inputs is the 4-20mA input that can be used with a transmitter for trace chemistry control, as a pH input, or as makeup conductivity for cycles of concentration control.

1575e with Trace Sensor Kit Includes the model 1575e controller with cooling tower conductivity sensor and left exit flow switch plumbing assembly on a mounting plate, and an Inline Fluorometer with Trace Connection / Isolation Kit, an Inline Tee.

1269338_____$4,695 W

1575e with pH or ORP Sensor Kit
Includes the model 1575e controller with cooling tower conductivity, flow switch plumbing assembly, and pH or ORP Sensor Kit on a mounting plate.

1269333 pH and cond_____$2,836 W
1269409 ORP and cond_____$2,836 W
1269378 Retrofit Kit, pH_____$1,109 R
1269387 Retrofit Kit, ORP_____$1,109 R

1575e with Cycles of Concentration
Includes the model 1575e controller with cooling tower conductivity sensor and flowswitch plumbing assembly on a mounting plate, and the Cycles of Concentration Kit.

1269339 1575e w/Cycles_____$2,780 W
1269426 Retrofit Kit, C of C_____$1,157 R

Copyright 2017 © Lakewood Instruments, LLC.
Printed in the USA, Rev A.4

LAKEWOOD INSTRUMENTS TRACE SENSOR KIT

The Trace Sensor Kit is used for additional Trace Chemistry control to the Lakewood Instruments model 1575e, model 2000e series, and NexSys® cooling tower controllers. The Trace Mounted Sensor Kit includes an Inline Fluorometer, an inline tee, a pre-wired isolator, a power supply.

The Inline Fluorometer is a low cost, compact fluorometer designed for monitoring of fluorescent dyes in industrial water systems. Integration of the inline Fluorometer into your 1575e automation system enables monitoring of fluorescent trends in real time for better control of your cooling water chemistry. The fluorometer is designed as a rugged, 24/7 device providing maximum performance, minimal maintenance and solid-state reliability.

PART NUMBER 1269338 SHOWN
Trace Mounted Sensor Kit shown with a Model 1575e Cooling Tower Water Treatment Controller on A Mounting Plate

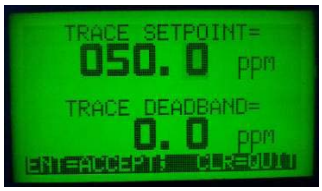

FEATURES

- Includes a single-channel fluorometer that provides a 4-20 mA analog signal output that is directly proportional to the concentration of your traced chemistry.
- Solid-state LED/Photodiode technology, no moving parts
- A low maintenance design to provide trouble-free performance.
- Includes a pre-wired isolator to eliminate power supply interference.
- Includes an in-line tee for use in light industrial environments.
- Works with PTSA fluorescent dye
- Probe output is pre-calibrated (base and slope) at 200 ppb trace @20mA. Using a 1 to 1000 PTSA mix equates to 100 ppb of trace equaling 100 ppm of chemical in system.

BENEFITS

- Easy to add to the Lakewood Instruments Model 1575e, 2000e Series, and NexSys® cooling tower controllers in the field. Firmware upgrade allows older 1575e units to accept this new technology. Note: Signal Conditioning is not available when used with the 2000e Series of controllers.
- Easy to transition to Trace Chemistry Control using Lakewood Instruments control schemes.
- Installs into your process flow with a PVC tee.
- Comes pre-set and aligned at the factory.

SPECIFICATIONS

Material	PVC Type 1	Range (Calibrated)	0 – 200 ppb (Trace)
Threading	1 Inch NPTF	Output Signal	4-20 mA
Max Pressure	100 psi	Input Voltage	8 TO 30 vdc
Max Temperature	140°f (60°C)		

Copyright 2017 © Lakewood Instruments, LLC.
Printed in the USA, Rev A.4

ORDERING INFORMATION

1269324

1269325

1269301

1269324	**1575e Trace Sensor Kit Includes Inline Fluorometer**, the 1575e Trace Connection/Isolation Kit, and an Inline Tee.
1269325	**NexSys® Series Trace Sensor Kit Includes Inline Fluorometer**, the NexSys® Trace Connection Kit, and an Inline Tee.
1269450	**NexSys® Series Trace Sensor Kit without 4-20 mA Input Node Includes Inline Fluorometer**, Enclosure, Power Supply, and an Inline Tee.
1269326	**1575e Trace Connection Kit Includes Isolator and Power Supply** (NOTE: Fluorometer and Tee not included)
1269327	**NexSys® Series Trace Connection Kit** Includes a N420I and a Power Supply. (NOTE: Fluorometer and Tee not included.)
1269301	Inline Fluorometer.
1269328	In-Line Tee
1269330	PTSA, 1 gallon, 10%

PART NO.	TRACE SENSOR SYSTEMS	LIST	CD
1269324	1575e Trace Sensor Kit	**$2,468**	**R**
1269325	NexSys® Trace Sensor Kit	**$2,909**	**R**
1269450	NexSys® Trace Sensor Kit without 4-20 Input Node	**$2,414**	**R**
1269326	1575e Trace Connection Kit	**$235**	**R**
1269327	NexSys® Trace Connection Kit	**$575**	**R**
1269301	Inline Fluorometer	**$2,368**	**R**
1269522	In-Line Tee	**$63**	**R**
1269524	Replacement O-Ring for Little Dipper	**$3**	**R**
1269330	PTSA, 1 Gallon, 10%	**$204**	**R**

Copyright 2017 © Lakewood Instruments, LLC.
Printed in the USA, Rev A.4

NexSys® Control System

The **NexSys®** control system is the latest in a long line of reliable, easy to use controllers from Lakewood Instruments. The NexSys® control system uses the latest in microprocessor technology with a 5.7" Color Touch Screen interface for a high level of application flexibility.

All features, parameters, settings, and functional requirements to operate, program, and monitor the **NexSys®** control system are accessible from the touch screen and DO NOT require the use of an external input, PC or device to operate or access. The **NexSys®** control system even includes On-Board Help Screens with wiring, programming, and maintenance instructions.

The **NexSys®** control system comes standard with the following system interfaces and DMX outputs: LON EIA 709 FTT10, BACnet IP, and MODbus TCP. The unit comes from the factory ready to integrate readings into a BAS, including: The state of any installed relay (On/Off) , Water meter readings, Conductivity readings, Additional sensor readings (ph, ORP), sensor alarms, Additional 4-20mA input readings, Flow condition, and other digital inputs.

The **NexSys®** control system comes standard with Ethernet capability through a browser (HTML5) interface that allows 100% access to all features and control parameters of the controller.

The **NexSys®** control system has an astounding array of built-in features such as:

- LonWorks, MODbus, and BACnet communications interface
- Ethernet capability through an HTML interface
- The capability to send E-service reports to a subscribed service
- The ability to display operating values with time and date stamps on color coded graphs with zoom and scroll features
- Up to eight active sensor inputs: 2 tower cond, 2 M/U cond, pH and ORP

Copyright 2017 © Lakewood Instruments, LLC.
Printed in the USA, Rev A.4

- Trace chemistry capable
- Two water meter inputs with field expansion capability to four
- Enclosure is NEMA 4X rated
- Two flow switch inputs configurable to any relay output
- Ability to add up to eight 4-20mA input readings
- Ability to add four digital inputs
- Ability to mount every sensor/input up to 400 meters away from the controller via 4-wire twisted pair
- Ability to control the chemistry in two towers at the same time
- Six relay outputs expandable to ten relay outputs for user configurable operations such as:
  Feed by Percent of Blowdown Time
  Feed by Setpoint with Percent of Time Feature as Part of Spaced Feed
  Trace Chemistry Control
  By Makeup Totalized Gallons
  By Blowdown Totalized Gallons
  By Percent On-Time
  By Scheduled Feed by Day and Time
- On-board Help Screens with wiring, programming, and maintenance instructions
- Left or Right Exit plumbing assemblies available

SPECIFICATIONS

Touch Screen Interface:

5.7" diagonal viewing area
Display size: 115X86 mm
Pixel: 320X240
Color: TFT 65536
Backlight: LED or CCFL
Power: 120/240 VAC 50/60 Hz

Relay ratings:

120VAC 3A per relay 15A total
Enclosure: NEMA 4X, ETL

Copyright 2017 © Lakewood Instruments, LLC.
Printed in the USA, Rev A.4

NexSys® The Next Generation in Reliable Controllers

	Price $	Type	S or D	1, 2 or X	1, 2 or X	1, 2 or X	1, 2 or X	S or D	1, 2 or X	S, D or X	4, 8 or X	4, 8 or X	S, L or X	1, 2 or X	XX
NexSys™ System Config (draft)		NXC													
Cooling Tower															
Systems (S=single D=Dual)	S = $3,130 D = $3,235														
Main Conductivity (1-2)	1 = $723 2 = $1,446														
Main pH (1-2)	1 = $737 2 = $1,474														
Main ORP (1-2)	1 = $737 2 = $1,474														
Make-up Conductivity (1-2)	1 = $873 2 = $1,746														
Relays (S= 6 or D= 10)	S = INCL D = $750														
Flowswitch (1 or 2)	1 = INCL 2 = INCL														
Water Meter Inputs (S=2 D=4)	S = INCL D = $382														
4-20MA Input (4 or 8)	4 = $488 8 = $976														
4-20mA Output (4 or 8)	CONSULT FACTORY														
2nd Remote Display (S=5.7" L=15")	S = $1,250 L = $3,000														
Mounting Plate (1 or 2)	1 = $147 2 = $294														
Custom Designator (-XX)	TBD														

X=no 0ption needed

All items are code W except 2nd remote display which is a code D

Example

Single cooling tower controller	**$4,590**	**NXC**	**S**	**-**	**1**	**1**	**X**	**X**	**-**	**S**	**-**	**1**	**S**	**-**	**X**	**X**	**-**	**X**	**-**	**X**	**-**	**XX**
with Conductivty and pH sensors,			**$3,130**		**$723**	**$737**	$0	$0		$0		$0	$0		$0	$0		$0		$0		$0
and plumbing with flowswitch																						

Copyright 2017 © Lakewood Instruments, LLC.
Printed in the USA, Rev A.4

Designed by TR Designs

NODES

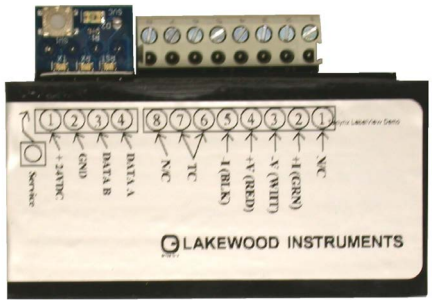

NCON
PART NO. 1269444

The Conductivity Node, (NCON) is a single channel of conductivity input to a 2000e series or NexSys® controller. A conductivity sensor must be ordered separately. The NIN option card is required for operation with a 2000e series controller.

NPH
PART NO. 1269443

The pH Node, (NpH) is a single channel of pH or ORP input to a 2000e series or NexSys® controller. A pH or ORP sensor must be ordered separately. The NIN option card is required for operation with a 2000e series controller.

NDIG
PART NO. 1269445

The Digital Input Node, (NDIG) is four channels of digital input to a 2000e series or NexSys® controller. The first two channels can be used as additional water meter inputs. This node can be used for drum switch inputs. The NIN option card is required for operation with a 2000e series controller.

N420I
PART NO. 1269446

The 4-20 mA Input Node, (N420I) is four channels of 4-20 mA input to a 2000e series or NexSys® controller. The NIN option card is required for operation with a 2000e series controller.

Copyright 2017 © Lakewood Instruments, LLC.
Printed in the USA, Rev A.4

NRLY W/RECEPTACLES PART NO. 1268833

The Node, Relay (NRLY) is four relay outputs in a NEMA 4X enclosure with a power cord and receptacles. The relays are pre-wired for 120 vac output. The NRLY power cord and receptacles can be removed for conduit connections and dry contacts. For use with the 2000e series and the NexSys® series. The NIN option card is required for operation with a 2000e series controller.

NCKT
PART NO. 1169439

The Node, Conductivity Kit (NCKT) is a four- electrode conductivity sensor, a 3/4 inch solvent-weld plumbing assembly, and an NCON with a NEMA 4X enclosure. For use with the 2000e series and the NexSys® series. The NIN option card is required for operation with a 2000e series controller.

PS
PART NO. 1107251

The Power Supply (PS) is used to provide the +24 vdc to the 2000 series add-on nodes such as the NCON, NRLY, NpH, or NDIG. A PS is required if more than two nodes are attached to a 2000e series controller. This power supply is not necessary when using nodes with a 2800e series or NexSys® controller.

Copyright 2017 © Lakewood Instruments, LLC.
Printed in the USA, Rev A.4

COMMUNICATIONS ACCESSORIES

EZWEB WIRELESS
PART NO. 1268976

The Lakewood Instruments EZWEB WIRELESS Internet Interface consists of a (Plug and Play) integrated HUB /Router and an EVDO Rev A (3G) wireless connection and connects up to four WEBNodes to the internet through a static IP. It also allows a wireless WLAN connection to the internet. The EZWEB requires a 1 year service agreement, part number 1268977.

INTERFACE, BACNET, DAC-633E
PART NO. 1269575

The DAC-633E is a fully programmable, Native BACnet™ Advanced Application Controller that communicates on Twisted- Pair Ethernet 10-BaseT using BACnet IP and BACnet over Ethernet, or on an RS-485 LAN using the BACnet MS/TP protocol. It is used with the Lakewood Instruments NexSys® control platform. Contact The Lakewood Instruments factory to determine if this device is necessary for your application.

PART NO.	NEXSYS® NODES AND ACCESSORIES	LIST	CD
1269444	NCON, Conductivity Node used to add conductivity sensors	$495	R
1269443	NpH, pH and ORP Node used to add pH/ORP sensors	$495	R
1269445	NDIG, Digital Input Node used to add digital inputs	$495	R
1269446	N420I, 4-20 mA Input Node used to add 4-20 ma inputs	$495	R
1268833	NRLY, Relay Node used to add four additional relays	$750	R
1169439	NCKT, Conductivity Node, sensor and tee prepackaged kit Can be used for make-up conductivity.	$951	W
1107251	PS (+24VDC supply required for 3 or more nodes)	$38	R
1269457	Cable, 4-conductor, 22awg, TP, 12 inches, NexSys	$7	R
1269458	Harness, 4-conductor, 22awg, TP, 12 inches, NexSys	$25	R
1268976	EZWEB WIRELESS system	$663	R
1268977	EZWEB WIRELESS Service 1-year subscription	CALL	N
1269575	Interface, BACNET , DAC-633E	$1,100	R
1269398	Display, Passtec, 5.7”	$1,250	D
1269425	Display, Passtec, 15”	$3,000	D

Copyright 2017 © Lakewood Instruments, LLC.
Printed in the USA, Rev A.4

COOLING TOWER ACCESSORIES AND REPL. PARTS

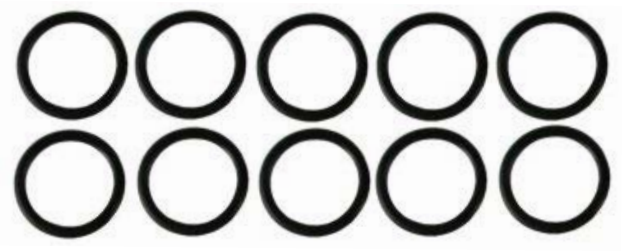

O-Ring
Set Of Ten
Part No.1269534

EPDM O-Rings (AS568-911) For Use With Lakewood Instruments Cooling Tower pH, Conductivity, ORP Sensors, And Flow Sights. These O-Rings Are Sold In Packages Of 10.

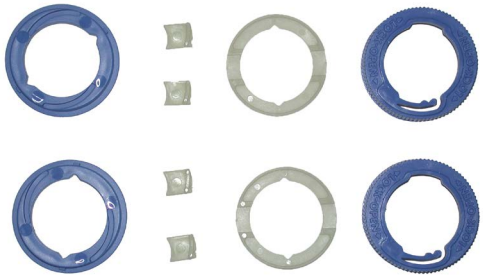

Blue Ring Replacement
Set Of Two
Part No. 1269533

The Blue Ring Replacement Kit Comes With Everything Needed Except Glue, To Replace The Blue Locking Ring On A Lakewood Instruments Plumbing Assembly. These Kits Are Sold In Sets Of Two.

Reed Switch
Part No. 1167235

This Reed Switch Assembly Comes With 36 Inches Of Cable For Use With Flow Switch Plumbing Assemblies That Are Attached To The Lakewood Instruments Controller Enclosures Or On A Mounting Plate.

Reed Switch 20 ft.
Part No. 1107004

This Reed Switch Assembly Comes With 20 Feet Of Cable For Use With Flow Switch Plumbing Assemblies That Are **NOT** Attached To The Lakewood Instruments Controller Enclosure.

Flow Float, Set Of Five
Part No. 1269595

The Flow Float Is Used In The Lakewood Instruments Flow Switch Plumbing Assemblies. The Flow Float Activates The Reed Switch And Provides A Visual Indicator Of Flow. The Floats Are Sold In Sets Of Five.

Copyright 2017 © Lakewood Instruments, LLC.
Printed in the USA, Rev A.4

Flow Sight, Set Of Five
Part No. 1269596

The Flow Sight (With O–Ring) Is Part Of The Flow Switch Plumbing Assembly. The Flow Sight Allows A Visible Indication Of The Condition Of The Flow Float. The Sights Are Sold In Sets Of Five. NOTE: Color May Vary.

2 electrode Conductivity Sensor 20 Foot
Part No. 1167158

The 2 Electrode Conductivity Cooling Tower Sensor. This Sensor Is Used On The Following Models: 101-161RS, 101-161RSFS, 140, 1512e, 1575, And 1575e.

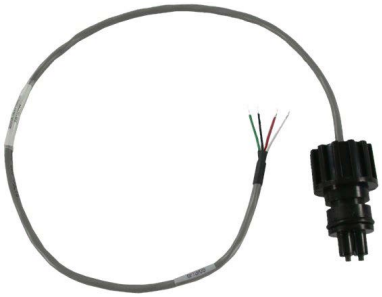

2 electrode Conductivity Sensor
Part No. 1167157

The 2 Electrode Conductivity Cooling T ower Sensor. This Sensor Is Used On The Following Models: 101, 111, 151, 161, 173, 175, 211, 215, 222C, 412, 420, And 140 And 1575e On A Mounting Plate.

4 electrode Conductivity Sensor
Part No. 1167286

The 4 Electrode Cooling Tower Conductivity Sensor With 30 Inches Of Cable For Use With The Models 224C, 1400, 2175, 2412, 2430, NCKT, and NexSys® on a mounting plate.

4 electrode Conductivity Sensor 20 Foot
Part No. 1169202

The 4 Electrode Cooling T ower Conductivity Sensor With 20 Ft. Of Cable For Use With The Models 2175e, 2412e, 2430e, 2175-N4, 2412-N4, 2430-N4, 2812e, 2830e, 2832e, 2875e, And NexSys®.

Also Available With A 4 Foot Body For Submersion Applications.

2 electrode Conductivity Sensor w/ 4ft Body Part No. 1169207
2 electrode Conductivity Sensor w/ 2ft Body Part No. 1269377

The 2 Electrode Conductivity Cooling T ower Sensor With Either a 2 Ft Or 4 Ft Body w/20 ft Cable For Submersion Applications. These Sensors Are Used On The Following Models: 101-161RS, 101-161RSFS, 140, 1512e, 1575, And 1575e.

Copyright 2017 © Lakewood Instruments, LLC.
Printed in the USA, Rev A.4

Sensor pH w/10 ft cable
Part No. 1269422

The pH Sensor with 10 foot cable and solution ground is used on the NexSys® series of cooling tower controllers.

Sensor ORP w/10 ft cable
Part No. 1269423

The ORP Sensor with 10 foot cable and solution ground is used on the NexSys® series of cooling tower controllers.

Sensor pH w/15 ft cable
Part No. 1240472

The pH Sensor with 15 foot cable and solution ground is used on the Model 1520e, 2350e, 2412e, 2812e, and 2832e.

Sensor ORP w/15 ft cable
Part No. 1240473

The ORP Sensor with 15 foot cable and solution ground is used on the Model 1530e, 2330e, 2430e, 2830e, and 2832e.

Sensor pH
Part No. 1167155

This pH Sensor Is Used On Models 350, 2350, And The Newer Model 2412. Older Model 2412 Controllers Can Be Upgraded In The Field To Use This Sensor.

Sensor ORP
Part No. 1169065

This ORP Sensor Is Used On Models 330, 2330, 2430.

Copyright 2017 © Lakewood Instruments, LLC.
Printed in the USA, Rev A.4

Sensor pH Part No. 1167153

The Sensor pH Is Used On Models 412, 420, 1400, And Older Model 2412 Controllers. Used In Conjunction With The pH Reference Sensor Part No. 1167154.

Sensor pH Reference Part No. 1167154

This Refillable pH Reference Sensor Is Used On Models 412, 420, 1400 And Older Model 2412 Controllers. Used In Conjunction With The pH Sensor Part Number 1167153. The Refill Kit Is The Model 8042 Part Number 1169064.

Remote Input RTD Part no. 1224302

The Remote Input RTD Is Used Where Extreme Variations In Water Temperature Cause Inaccurate Conductivity Readings. The RTD Is 500 Ohm NTC. Can Be Used With The Models 101, 111, 151, 161, 140, 173, 175, 211, 215, 412, 420, 1400, 1575, 1575e, 2175, 2412, 2430, and NexSys®.

FLO-TEKTOR (formerly called SPAD)
Part No. 1269090 5VDC 20 ft Part No. 1269228 5 VDC 50 ft
Part No. 1269103 24VDC 20 ft Part No. 1269229 24 VDC 50 ft

The **FLO-TEKTOR**, formerly called the SPAD, is used as an alternative or as a backup to a mechanical flow switch. It is designed to detect the operation of external equipment, such as a recirculation pump. This allows the determination of flow based on the operation of a system pump instead of, or in addition to, the flow through a pipe. The FLO-TEKTOR can be used with any Lakewood Instruments controller (Must specify appropriate model below.).

FLO-TEKTORs are externally mounted with no interconnections to pumps required. Available with 20 feet or 50 feet of cable.

FLO-TEKTOR, 5V, (Models 140, 150, 1520/30e, and 1575e)

FLO-TEKTOR, 24V, (Models 1512e, 2000 series, and NexSys®)

Copyright 2017 © Lakewood Instruments, LLC.
Printed in the USA, Rev A.4

8042
Part no. 1169064

8042 Is A Refill Solution Kit For pH Reference Sensor 1167154. It Contains 8 Oz. Of KCL Solution

Plumbing 100
Part No. 1167214

The Replacement Plumbing Assembly With 3/4 Inch NPT Connections For Use With The Model 101, 111, 151, 161, 140, And 1575e W/ Cooling Tower Conductivity Sensors. Does Not Include Flow Switch.

Plumbing FS
Part No. 1167215

The Replacement Plumbing Assembly Comes With Flow Sight, Float, Reed Switch, And 3/4 Inch NPT Connections For Use With The Model 101- FS, 111-FS, 151-FS, 161-FS, 173, 175, 211, 215, 222C, 224C, Or 2175 Cooling Tower Controllers.

Plumbing FS 20 ft.
Part No. 1107003

The Replacement Plumbing Assembly Comes With Flow Sight, Float, Reed Switch, And 3/4 Inch NPT Connections For Use With The Models 101- RSFS, 111-RSFS, 151-RSFS, 161-RSFS, 140 W/ FS, 1575e W/ FS, 2175e, ,2875e And NexSys® Cooling Tower Controllers.

Plumbing FS 20 ft. Right Exit.
Part No. 1230562

The Replacement Plumbing Assembly Comes With Flow Sight, Float, Reed Switch, And 3/4 Inch NPT Connections For Use With The Models 101- RSFS, 111-RSFS, 151-RSFS, 161-RSFS, 140 W/ FS, 1575e W/ FS, 2175e, 2875e, and NexSys® Cooling T ower Controllers. This plumbing assembly exits to the right.

Plumbing Tee
Part No. 1169440

This Replacement Plumbing Assembly Is Designed For 3/4 Inch Solvent Weld Connections. Used With Lakewood Instruments Cooling Tower Conductivity Sensors.

Copyright 2017 © Lakewood Instruments, LLC.
Printed in the USA, Rev A.4

Plumbing 2330, 2350
Part No. 1169066

The Replacement Plumbing Assembly Comes With Flow Sight, Float, Reed Switch, Solution Ground, And 3/4 Inch NPT Connections For Use With The Model 2330, Or 2350 Cooling Tower Controllers.

Plumbing 330, 350
Part No. 1167233

The Replacement Plumbing Assembly Comes With Flow Sight, Float, Reed Switch, Solution Ground And 3/4 Inch NPT Connections For Use With The Model 330, Or 350 Cooling Tower Controllers.

Plumbing 2412, 2430
Part No. 1167067

The Replacement Plumbing Assembly Comes With Flow Sight, Float, Reed Switch, Solution Ground And 3/4 Inch NPT Connections For Use With The Model 2412, Or 2430 Cooling Tower Controllers.

Plumbing 412
Part No. 1167217

The Replacement Plumbing Assembly Comes With Flow Sight, Float, Reed Switch, Solution Ground And 3/4 Inch NPT Connections For Use With The Model 412 Cooling Tower Controller.

Plumbing 420
Part No. 1169324

The Replacement Plumbing Assembly Comes With Flow Sight, Float, Reed Switch, Solution Ground And 3/4 Inch NPT Connections For Use With The Model 420 Cooling Tower Controller.

Plumbing SE
Part No. 1234634

The Replacement Plumbing Assembly Comes With Flow Sight, Float, Reed Switch, Solution Ground And 3/4 Inch NPT Connections For Use With The Model 420 Cooling Tower Controller.

Copyright 2017 © Lakewood Instruments, LLC.
Printed in the USA, Rev A.4

Plumbing 1400
Part No. 1167218

The Replacement Plumbing Assembly With 90 degree Bend Comes With Flow Sight, Float, Reed Switch, Solution Ground And 3/4 Inch NPT Connections. Used On The Model 1400 Cooling Tower Controller.

Plumbing 1400 N4
Part No. 1167220

The Replacement Plumbing Assembly With 0 degree Bend Comes With Flow Sight, Float, Reed Switch, Solution Ground And 3/4 Inch NPT Connections. Used On The Model 2412-N4, And 2430-N4 Cooling Tower Controllers.

Plumbing 1400 COR
Part No. 1167219

The Replacement Plumbing Assembly With 90 degree Bend Comes With Flow Sight, Float, Reed Switch, Solution Ground, 3/4 Inch NPT Connections, And An Extra Tee For Use With A Corrosion Sensor. Used On The Model 1400 Cooling T ower Controller With Corrosion Monitor.

Plumbing 1400 COR
Part No. 1167221

The Replacement Plumbing Assembly With 0 degree Bend Comes With Flow Sight, Float, Reed Switch, Solution Ground 3/4 Inch NPT Connections, And An Extra Tee For Use With A Corrosion Sensor. Used On The Model 1400 Cooling Tower Controller With Corrosion Monitor.

Plumbing 1520/30e, 2330e, 2350e
Part No. 1240477

The Replacement Plumbing Assembly Comes With Flow Sight, Float, Reed Switch, And 3/4 Inch NPT Connections. For Use With The Model 1520e, 1530e, 2330e, 2350e, and NexSys® Cooling Tower Controllers. Does Not Include Solution Ground. **Also available in Right Exit version. Contact Lakewood for part number.**

Plumbing 1512e, 2412e, 2430e, 2812e, 2830e, NexSys®
Part No. 1268640

The Replacement Plumbing Assembly Comes With Flow Sight, Float, Reed Switch, And 3/4 Inch NPT Connections. For Use With The Model 1512e, 2412e, 2430e, and NexSys® Cooling Tower Controllers. **Also available in Right Exit version. Contact Lakewood for part number.**

Copyright 2017 © Lakewood Instruments, LLC.
Printed in the USA, Rev A.4

Plumbing 2400e and NexSys® w/pH, Conductivity, and ORP
Part No. 1268942

The Replacement Plumbing Assembly Comes With Flow Sight, Float, Reed Switch, And 3/4 Inch NPT Connections. For Use With The Model 2832e and NexSys® Cooling Tower Controllers.
Also available in Right Exit version. Contact Lakewood for part number.

Plumbing 2000e and NexSys® w/pH and ORP
Part No. 1269245

The Replacement Plumbing Assembly Comes With Flow Sight, Float, Reed Switch, And 3/4 Inch NPT Connections. For Use With The Model 2000e and NexSys® Cooling Tower Controllers.
Also available in Right Exit version. Contact Lakewood for part number.

DS DRUM SWITCH
PART NO. 1167511

The Lakewood Instruments Drum Level Switch Can Be Used As Either A High Or A Low Level Indicator. Applications: Chemical Drum Monitor, Waste Water Tank Level, Can Be Used With The NexSys® Series, Can Be Used With The 1500 Series Features: Normally Open Or Normally Closed Contacts, 4 Ft Body Length

pH/ORP Transmitter
Part no. 1269193

The pH/ORP Transmitter Converts The pH or ORP Signal From A pH or ORP Sensor To A 4-20 mA Signal.

Conductivity Transmitter
Part no. 1269340

The Conductivity Transmitter Converts the Conductivity Signal From a Conductivity Sensor to a 4-20 mA Signal.
For use with the model 1575e

pH / ORP Simulator
Part No. 1263402

The pH / ORP Simulator Is Used To Simulate pH Or ORP Input To A Controller. The Simulator Is Powered By A 9v Battery And Comes With A Coaxial Cable With BNC Connectors.

Copyright 2017 © Lakewood Instruments, LLC.
Printed in the USA, Rev A.4

EZ Service Kit
Part No. 1268992

The EZ Service Kit includes: a flow sight, a float, spare fuses, O-rings, O-lube, tie wraps, a small screwdriver, a wire brush, pH simulator shunts, conductivity test terminal blocks for cooling tower controllers, and instructions for use, all in a compartmentalized plastic bag that can be rolled up and placed in your kit.

pH/ORP Preamplifier
Part no. 1167124

The pH/ORP Preamplifier Is Used To Convert The pH/ORP Signal From A pH/ORP Sensor Into A Voltage For Use By The Following Models Of Controllers: 330-RP, 350-RP, 350S, 352, 353, 820, 830, 1020, 1400, And 1720-R.

Conductivity Preamplifier
Part no. 1167230

The Conductivity Preamplifier Is Used To Convert The Conductivity Signal From A Conductivity Sensor Into A Voltage For Use By The Following Models Of Controllers: 250-RP, 250-2, 260-RP, 260-2, 843, 1040, And 1400.

Copyright 2017 © Lakewood Instruments, LLC.
Printed in the USA, Rev A.4

EchoPod® DL10

Ultrasonic Level Transmitter

FLOWLINE™
LEVEL BEST

Application

The general purpose ultrasonic transmitter provides continuous level measurement up to 49.2” (1.25m) with a 4-20 mA signal output, and is configured via our free WebCal® software. This non-contact liquid level sensor is ideally suited for corrosive, sticky or waste liquids, and is selected for chemical feed, IBC or drum, skid or machine and cooling tower applications.

Features

- Continuous non-contact level measurement up to 49.2” (1.25m)
- 4-20 mA output for longer signal distances up to 1000’ (300m)
- Configuration is fast and easy via WebCal software and USB adapter
- Narrow 2” beam width and short 2” dead band optimized for small tanks
- PVDF transducer and 6P polycarbonate enclosure for corrosive liquids
- Automatic temperature compensation for accurate measurement

Copyright 2017 © Lakewood Instruments, LLC.
Printed in the USA, Rev A.4

EchoPod® DL10

Ultrasonic Level Transmitter

FLOWLINE™ LEVEL BEST

Specifications

Range:	49.2” (1.25m)
Accuracy:	0.125” (3mm)
Resolution:	0.019” (0.5mm)
Dead band:	2” (5cm)
Beam width:	2” (5cm)
Configuration:	WebCal® PC Windows® USB 2.0
Memory:	Non-volatile
Supply voltage:	24 VDC (loop)
Consumption:	0.5W
Loop resist.:	400Ω max @ 24 VDC
Signal output:	4-20 mA, two-wire
Signal invert:	4-20 mA or 20-4 mA
Loop fail-safe:	4 mA, 20 mA, 21 mA, 22 mA or hold last
Process temp.:	F: 20° to 140° C: -7° to 60°
Temp. comp.:	Automatic
Ambient temp.:	F: -31° to 140° C: -35° to 60°
Pressure:	MWP = 30 PSI (2 bar)
Enclosure rating:	Type 6P, encapsulated, corrosion resistant & submersible
Encl. material:	Polycarbonate
Strain relief mat.:	Santoprene
Trans. material:	PVDF
Cable jacket mat:	Polyurethane
Cable type:	4-conductor, shielded
Cable length:	48” (1.2m)
Process mount:	1” NPT (1” G)
Mount gasket:	Viton®
Classification:	General purpose
Compliance:	CE, RoHS
Approvals:	cFMus

Dimensions

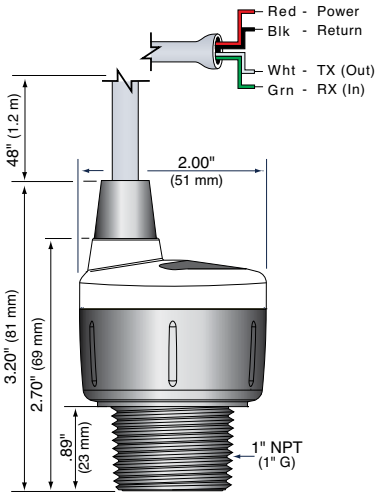

Configuration

LI99-1001

The level sensor is configurable via our free WebCal PC software and Fob USB adapter. The sensors are offered with and without Fobs. Fobs are universal and can be used to configure any WebCal compatible product. Download your free copy of WebCal in English or Chinese.

Ordering

DL10 - [ ] [ ]

PROCESS MOUNT (1)

0 NPT (US)

FOB USB ADAPTER (2)

0 Without Fob

1 With Fob

NOTES

1) Install the level sensor using Flowline installation fittings or equivalents.
2) The level sensor is configured via our WebCal software and one LI99-1001 Fob USB adapter. The level sensor is offered with and without a Fob. Fobs are universal and can be used to configure any WebCal compatible product. WebCal is a free download from our website.

Copyright 2017 © Lakewood Instruments, LLC.
Printed in the USA, Rev A.4

Cooling Tower Accessories and Replacment Parts

PART NO.	DESCRIPTION	LIST	CD
1269534	Kit, O-Ring, 1166418, for sensor and/or flow sight, set of 10	$15	R
1269533	Kit, Blue Ring replacement, 1169740, set of two	$62	R
1167235	Reed Switch w/36 in. of cable for use with Mounting Plate	$42	R
1107004	Reed Switch w/20 ft of cable	$66	R
1269595	Kit, Flow Float, 1167234, set of five	$92	R
1269596	Kit, Flow Sight, 1167266, set of five	$82	R
1167158	Sensor, Conductivity 2 elec w/ 20 ft cable	$263	W
1169207	Sensor, Conductivity, 2 elec 4 ft body w/20 ft cable	$295	W
1269377	Sensor, Conductivity, 2 elec 2 ft body w/20 ft cable	$295	W
1167157	Sensor, Conductivity 2 elec w/ 2 ft Cable	$226	W
1167286	Sensor, Conductivity 4 elec	$272	W
1169202	Sensor, Conductivity 4 elec w/ 20 ft of cable	$309	W
1169201	Sensor, Conductivity, 4 elec 4ft body (NOT PICTURED)	$355	W
1269422	Sensor, pH NexSys®	$469	W
1269423	Sensor, ORP NexSys®	$469	W
1240472	Sensor, pH 1520e, 2350e, 2412e, 2812e, 2832e w/15 ft of cable	$469	W
1240473	Sensor, ORP 1530e, 2330e, 2430e, 2830e, 2832e w/15 ft of cable	$469	W
1169065	Sensor, ORP 330. 2330, 2430	$402	W
1167155	Sensor, pH 350, 2350, 2412	$370	W
1167153	Sensor, pH electrode 412, 2412	$326	W
1167154	Sensor, pH Reference 412, 2412	$319	W
1224302	Remote input RTD, 500 NTC (Temperature input)	$102	R
1169064	8042 (refill solution for 1167154)	$66	R
1269090	FLO-TEKTOR, 5 VDC 20 ft cable (formerly SPAD)	$199	R
1269228	FLO-TEKTOR, 5 VDC 50 ft cable (formerly SPAD)	$199	R
1269103	FLO-TEKTOR, 24 VDC 20 ft cable (formerly SPAD)	$199	R
1269229	FLO-TEKTOR, 24 VDC 50 ft cable (formerly SPAD)	$199	R
1167214	Plumbing, tee, 3/4 inch NPT	$102	R
1167215	Plumbing, FS, plumbing on box	$208	R
1107003	Plumbing, with 20' FS, remote plumbing, Left Exit	$208	R
1230562	Plumbing, with 20' FS, remote plumbing, Right Exit	$208	R
1169440	Plumbing, tee	$102	R
1169066	Plumbing, 2330, 2350	$459	R
1167233	Plumbing, 330/350	$459	R
1167067	Plumbing, 2412/2430	$459	R
1167217	Plumbing, 412	$459	R
1169324	Plumbing, 420	$459	R
1234634	Plumbing, SE	$459	R
1167218	Plumbing,1400 w/90° bend	$459	R
1167220	Plumbing, N4, 1400 w/0° bend	$459	R
1167219	Plumbing,1400 COR w/90° bend	$459	R
1167221	Plumbing, 1400 COR w/0° bend	$459	R
1240477	Plumbing, 1520/30e, 2330e, 2350e,NexSys® w/ 20ft flow switch	$216	R
1268640	Plumbing, 1512e, 2412e, 2430e, 2812e, 2830e, NexSys®	$255	R
1268942	Plumbing, 2400e, NexSys® w/ pH, conductivity, and ORP	$289	R
1269245	Plumbing, 2000e, NexSys® w/pH and ORP	$255	R
1269455	Plumbing, 1520/1530e, w/fs, Right Exit	$216	R
1167511	Drum Switch	$239	R
1269193	pH/ORP transmitter	$368	R
1269340	Conductivity transmitter	$745	R
1263402	pH/ORP simulator	$240	R
1268992	EZ Service Kit	$32	R

Copyright 2017 © Lakewood Instruments, LLC.
Printed in the USA, Rev A.4

PART NO.	DESCRIPTION	LIST	CD
1167124	pH/ORP preamplifier	$434	R
1167230	Conductivity preamplifier	$434	R
1269006	Lubricant Pack, Silicone, set of 20	$15	R
1269717	Fuse, Kit, 100mA, 250V, Slow, AG3, QTY 5	$15	R
1269720	Fuse, Kit, 10A, 250V, Fast, AG3, QTY 5	$15	R
1269733	Fuse, Kit,15A, 250V, Fast, 3AB, QTY 5	$15	R
1269734	ECHOPOD,MODEL DL10-00	$369	R
1269735	ECHOPOD,MODEL DL10-01 WITH FOB	$419	R

MISCELLANEOUS PLUMBING ACCESSORIES

9050 CORROSION COUPON RACK
PART NO. 1167416

The 9050 Is A PVC Four Coupon Holder System. The System Includes An Inlet And Outlet Shutoff Valve, Four (4) Coupon Holders And A 5 Gpm (18.9 LPM) Flow Regulator.Material Is PVC Schedule 40 With Brass Regulator And Valves. The Coupon Holder Is 3⁄4 Inch MNPT, PVC. The Pressure Rating Is 140 Psi At 100°F (9.7 Bar @ 38°C). The Maximum Temperature Is 140°F (60°C)

COUPON HOLDER
PART NO. 1167500

The Coupon Holder Is 3⁄4 Inch MNPT, PVC. The Pressure Rating Is 140 Psi At 100°F (9.7 Bar @ 38°C). The Maximum Temperature Is 140°F (60°C)

9102 SAMPLE SHUTOFF ASSEMBLY
PART NO. 1167419

The 9102 Is A PVC Inlet Plumbing Assembly With Brass Shut-Off Valve And A Sample- Cock. The Material Is PVC Schedule 80 With Brass Valves. The Pressure Rating Is 140 Psi At 100°F (9.7 Bar @ 38°C). The Maximum Temperature Is 140°F (60°C). The Connections Are 3⁄4 Inch NPT.

Copyright 2017 © Lakewood Instruments, LLC.
Printed in the USA, Rev A.4

9160 CORPORATION STOP
Part No. 1167423 Stainless Steel 18 inch
Part No. 1167424 Carpenter20 18 inch
Part No. 1269718 Stainless Steel 9 inch
Part No. 1269719 Carpenter20 9 inch

The 9160 Is A Corporation Stop That Will Effectively Disperse Chemicals Such As Acid In The Center Of A Pipe. Process And Chemical Inlet Connections Are 1 Inch NPT. The Quill Diameter Is 1⁄2 Inch. The Quill Material Is 316ss. The Quill Adjustment Valve And Process Connections Are Brass. The Chemical Inlet Valve Is PVC Schedule 80. Also Available In Carpenter 20, Part Number 1167424. **Available in 9 and 18 inch quill lengths.**

9176 CHEMICAL INJECTION MANIFOLD
PART NO. 1167426

The 9176 Injection Manifold Is Designed For Use With Four (4) Chemical Injection Points Including Acid. A Sample Valve, Shut Off Valve, And Quick Release Unions Are Included For Easy Removal. The Material Is PVC, Schedule 40 And 80. There Are Four 1⁄2 FNPT, PVC, Injection Tees, One Is Schedule 80 For Acid. The Maximum Pressure Is 140 Psi @ 100°F (9.7 Bar @ 38°C). The Maximum Temperature Is 140°F (60°C).

Ordering Information

PART NO.	DESCRIPTION	LIST	CD
1167500	Coupon Holder, PVC 3⁄4" NPT	$61	R
1167416	9050, PVC corrosion coupon rack	$479	R
1167419	9102, Controller inlet and shut-off valve with sample cock	$112	R
1167423	9160, 316 S.S. corporation stop. 1" NPT. CPVC shut off valve 18 in.	$317	R
1167424	9160C20, Carpenter20 corp stop. 1" NPT. CPVC shut off valve 18 in.	$454	R
1269718	9160, 316 S.S. corporation stop. 1″ NPT. CPVC shut off valve 9 in.	$262	R
1269719	9160C20, Carpenter20 corp stop. 1″ NPT. CPVC shut off valve 9 in.	$328	R
1167426	9176, PVC Injection manifold for up to 4 chemical pumps	$257	R

Copyright 2017 © Lakewood Instruments, LLC.
Printed in the USA, Rev A.4

95 Series "SPRITE" MOTORIZED BALL VALVES

The model 95 series, "SPRITE", is a mini 2-way motorized ball valve designed as an economical alternative to solenoid valves for use in high-fouling, cooling water environments. It is considered "mini" because it only measures approximately 3 inches wide by 3 inches tall.

The Sprite is motor-driven open by line voltage and motor-driven closed by way of a built in capacitor. This has the benefit of ensuring that the valve will close even on a complete loss of power and it only requires two wires to power it.

The long service life valve and actuator (approximately 70,000 to 100,000 cycles) includes a manual override and a visual indicator of valve position.

95 Series Specifications

VALVE

Sizes	1/2, 3/4, and 1 inch
Body/Ball/Stem	CPVC, Chrome-Plated Brass, or 316 Stainless Steel
Seal	EPDM
Seat	PTFE
Threads	NPT (Female)
Maximum Pressure	145 psi CPVC; 232 psi Brass; 232 psi Stainless
Maximum Temperature	140°F (60°C)
Max Delta-P	100 psi to fully close

ACTUATOR

Housing Material	ABS
Ambient Temp	-4°F to 113°F (-20°C to 45°C)
Rating	IP67
Max Torque	2 Nm
Power Supply	120/240 VAC
Max Power	5 W
Current	25 ±5 mA
Running Time	5 - 7 seconds

Copyright 2017 © Lakewood Instruments, LLC.
Printed in the USA, Rev A.4

ORDERING INFORMATION

VALVE ASSEMBLY MODEL NUMBER

SIZE	CPVC	CHROME/BRASS	SS
1/2 inch	95SP50	95SB50	95SS50
3/4 inch	95SP75	95SB75	95SS75
1 inch	95SP100	95SB100	95SS100

Sprite shown with J-Box Option

95 Series "SPRITE" MOTORIZED BALL VALVES

PART NO.	DESCRIPTION	LIST	CD
1269072	95SP50, 1/2" CPVC MOTORIZED BALL VALVE	$245	R
1269073	95SP75, 3/4" CPVC MOTORIZED BALL VALVE	$245	R
1269074	95SP100, 1" CPVC MOTORIZED BALL VALVE	$245	R
1269076	95SB50, 1/2" chrome-plated brass MOTORIZED BALL VALVE	$245	R
1269077	95SB75, 3/4"chrome-plated brass MOTORIZED BALL VALVE	$251	R
1269078	95SB100, 1" chrome-plated brass MOTORIZED BALL VALVE	$251	R
1269080	95SS50, 1/2" 316 SS MOTORIZED BALL VALVE	$245	R
1269081	95SS75, 3/4" 316 SS MOTORIZED BALL VALVE	$262	R
1269082	95SS100, 1" 316 SS MOTORIZED BALL VALVE	$262	R
1269262	J-BOX OPTION	$57	R

NOTE: Other materials and sizes are available with minimum 100 piece buy.

Copyright 2017 © Lakewood Instruments, LLC.
Printed in the USA, Rev A.4

SPRITE XT

The SPRITE XT, is a 2-way motorized ball valve with over 2.5 times the torque of the series 95 SPRITE.

The Sprite XT is motor-driven open by line voltage and motor-driven closed by way of a built in capacitor. This has the benefit of ensuring that the valve will close even on a complete loss of power and it only requires two wires to power it.

The brass valve is a standard full port design which is less restrictive than other styles, providing high flow characteristics with low pressure drops.

The SPRITE XT includes a manual override, a visual indicator of valve position, and a power cord in an 8 X 6 x 4 NEMA 4X enclosure.

SPRITE XT SPECIFICATIONS

VALVE

Sizes	3/4 inch
Body/Ball/Stem	Brass
Seal	EPDM
Seat	Reinforced PTFE
Threads	NPT (Female)
Maximum Pressure	360 psi (Static)
Maximum Temperature Max	250°F (121°C)
Max Close-Off Press.	100 psi

ACTUATOR

Housing Material	ABS
Ambient Temp	-22°F to 122°F (-30°C to 50°C)
Rating	NEMA 4X
Max Torque	50 in.lb.
Power Supply	120 VAC
Max Power	8 W Peak, 5 W
Current	25 ±5 mA
Running Time	12-15 seconds

PART NO.	DESCRIPTION	LIST	CD
1269374	VALVE,BALL,3/4" BRASS, SPRITE XT	$375	R

Copyright 2017 © Lakewood Instruments, LLC.
Printed in the USA, Rev A.4

9500 SERIES COOLING WATER BLOWDOWN VALVES

950X SERIES PLASTIC VALVE ASSEMBLIES

Body	PVC
Sizes	1/2 to 2 inch
Guide	316 SS
Flow Control	Set screw
Diaphragm	Buna-N
Differential Pressure	10 psi to open
Max Pressure	50 psi (3.4 bar)
Max Temperature	120° F (49 °C)

Supplied with 120 VAC to 24 VDC power supply

951X SERIES BRASS VALVE ASSEMBLIES

Body	Brass
Sizes	1/2 to 1 inch
Diaphragm	Viton
Differential Pressure	10 psi to open
Max Pressure	235 psi (16.2 bar)
Max Temperature	180° F (82° C)
Power	120VAC

VALVE ASSEMBLY MODEL AND PART NUMBER

SIZE	PLASTIC	BRASS	FLOW RANGE
1/2 inch	9501 (1167433)	9511 (1166666)	1-10 gpm
3/4 inch	9502 (1167434)	9512 (1166667)	5-15 gpm
1 inch	9503 (1167435)	9513 (1166668)	10-40 gpm
1 1/2 inch	9504 (1167436)		15-80 gpm
2 inch	9505 (1167437)		20-150 gpm

Flow range is a rough approximation for pressure differentials from 1 to 50 psi (0.01 to 3.4 bar)

9500 SERIES COOLING WATER BLEED VALUES

PART NO.	DESCRIPTION	LIST	CD
1167433	9501, 1/2" plastic diaphragm bleed valve	$92	R
1167434	9502, 3/4" plastic diaphragm bleed valve	$92	R
1167435	9503, 1" plastic diaphragm bleed valve	$92	R
1167436	9504, 1 1/2" plastic diaphragm bleed valve	$189	R
1167437	9505, 2" plastic diaphragm bleed valve	$230	R
1166666	9511, 1/2" brass diaphragm bleed valve	$191	R
1166667	9512, 3/4" brass diaphragm bleed valve	$291	R
1166668	9513, 1" brass diaphragm bleed valve	$444	R

Copyright 2017 © Lakewood Instruments, LLC.
Printed in the USA, Rev A.4

9600 Series Y Strainers

960X SERIES	STEEL Y STRAINER	961X SERIES	PLASTIC Y STRAINER
BODY	CAST IRON	BODY	PVC
SIZES	1/2 to 1 inch	SIZES	1/2 to 1 inch True Union
SCREEN	20 mesh inch stainless steel	SCREEN	1/32" perforated plastic
MAX PRESSURE	250 psi @ 100°F	MAX PRESSURE	150 psi @ 70°F
MAX TEMPERATURE	120°F	MAX TEMPERATURE	150°F

STRAINER MODEL AND PART NUMBER

SIZE	STEEL	PLASTIC
1/2 inch	9601 (1166675)	9611 (1166682)
3/4 inch	9602 (1166676)	9612 (1166683)
1 inch	9603 (1166677)	9613 (1166684)

ORDERING INFORMATION

PART NO.	DESCRIPTION	LIST	CD
1166675	9601, 1/2" steel wye strainer	$30	R
1166676	9602, 3/4" steel wye strainer	$34	R
1166677	9603, 1" steel wye strainer	$41	R
1166682	9611, 1/2" plastic wye strainer	$94	R
1166683	9612, 3/4" plastic wye strainer	$107	R
1166684	9613, 1"plastic wye strainer	$117	R

Copyright 2017 © Lakewood Instruments, LLC.
Printed in the USA, Rev A.4

WATER METERS

Copyright 2017 © Lakewood Instruments, LLC.
Printed in the USA, Rev A.4

AUTOTROL™ TURBINE WATER METER

1TM-NPT shown

Flow Sensor Specifications

	MODEL 1TM 1 inch (25 mm)	MODEL 2TM 2 inch (51 mm)
Flow rate range	0.275 – 35 gpm (0.0625 – 7.95 m^3 /h)	5 – 250 gpm (1.14 – 56.8 m^3/h)
Materials of construction:		
Housing	30% Glass-Filled PPO†	30% Glass Filled PPO†
Turbine (Impeller)	Polypropylene	Polypropylene
Bearings	Polyimide	Carbon Graphite
Shaft	302 SS	No shaft—thrust bearing
Accuracy	± 3% of reading	± 3% of reading
Pressure Drop	1.5psi@30gpm (10.3 kPa @ 7 m^3/h)	2.5 psi @ 150 gpm (17.2 kPa @ 34 m^3/h)
Maximum water temp.	100°F (38°C)	100°F (38°C)
Maximum temp.	122°F (50°C)	122°F (50°C)
Maximum pressure	127 psi (875 kPa)	100 psi (689 kPa)
Available cable lengths	25, 50 ft (7.6, 15.2 m)	25, 50 ft (7.6, 15.2 m)
Maximum cable length – kit form	1,000 ft. (305 m)	1,000 ft. (305 m)

† **PPO – Polyphenylene Oxide**

Copyright 2017 © Lakewood Instruments, LLC.
Printed in the USA, Rev A.4

ORDERING INFORMATION

1033238	1TM-ESW	1 inch turbine meter with solvent weld PVC adapters
3023532	1TM-NPT	1 inch turbine meter with 1 inch NPT stainless steel adapter
1034080	2TM-ESW	2 inch turbine meter with solvent weld PVC adapters
3023536	2TM-NPT	2 inch turbine meter with 2 inch NPT stainless steel adapter
1033317	400B418-701	1 inch turbine meter only (matching gaskets sold separately)
1033358	480B78G1	2 inch turbine meter only (matching gaskets sold separately)

WATER METER CABLE (ORDER ONE CABLE FOR EACH TURBINE)

1033354	49C25	25 ft cable with Hall Effect sensor
1033355	49C50	50 ft cable with Hall Effect sensor

INSTALLATION INSTRUCTIONS

Install the turbine assembly in the water line. Note the flow direction arrow on the turbine body. It is highly recommended that there be a length of straight pipe either side of the turbine equal to ten times the pipe diameter.

If installation conditions do not permit this length, a minimum of 12 inches (31 cm) of straight pipe before and after the 2 inch (5 cm) turbine, and 6 inches (15 cm) before and after the 1 inch (2.5 cm) turbine may be sufficient.

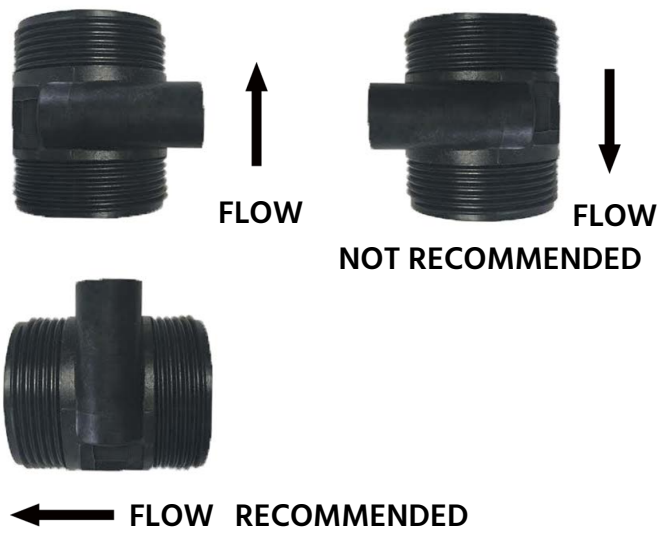

CAUTIONS:

- **AUTOTROL TURBINE WATER METERS ARE NOT TO BE USED AS A UNION. WATER METERS MUST BE SUPPORTED AT BOTH ENDS.**
- **WATER METERS WILL BE IDEALLY LOCATED IN HORIZONTAL PIPE WITH A LENGTH OF STRAIGHT PIPE EQUAL TO 10 PIPE DIAMETERS ON EITHER SIDE.**
- **WATER METERS MUST HAVE FLOW ORIENTED FROM BOTTOM TO TOP WHEN MOUNTED VERTICALLY.**
- **DO NOT OVER-TIGHTEN THE TURBINE HOUSING ADAPTER NUTS OR YOU MAY DAMAGE THE THREADS**

Copyright 2017 © Lakewood Instruments, LLC.
Printed in the USA, Rev A.4

1TM-NPT
PART NO. 3023532

The 1TM-NPT Is A 1 Inch Turbine Water Meter With Stainless Steel NPT Adapter Fittings. The Flow Rate Is .275 – 35 Gpm. Max Water Temp 100° F (38° C), Max Temp 122° F (50° C) And Max Pressure 127 Psi (875 KPA).The 1TM-NPT Comes With All Of The Parts Shown. Hall Effect Cable Sold Separately.

1TM-ESW
PART NO. 1033238

The 1TM-ESW Is A 1 Inch Turbine Water Meter With PVC Solvent Weld Adapter Fittings. TheFlow Rate Is .275 – 35 Gpm. Max Water Temp 100° F (38° C), Max Temp 122° F (50° C) And Max Pressure 127 Psi (875 KPA). The 1TM-ESW Comes With All Of The Parts Shown. Hall Effect Cable Sold Separately.

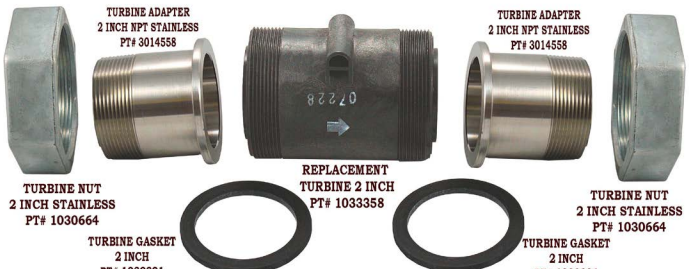

2TM-NPT
PART NO. 3023536

The 2TM-NPT Is A 2 Inch Turbine Water Meter With Stainless Steel NPT Adapter Fittings. The Flow Rate Is 5 – 250 Gpm. Max Water Temp 100° F (38° C), Max Temp 122° F (50° C) And Max Pressure 100 Psi (689 KPA). The 2TM-NPT Comes With All Of The Parts Shown. Hall Effect Cable Sold Separately.

2TM-ESW
PART NO. 1034080

The 2TM-ESW Is A 2 Inch Turbine Water Meter With PVC Solvent Weld Adapter Fittings. The Flow Rate Is 5 – 250 Gpm. Max Water Temp 100° F (38° C), Max Temp 122° F (50° C) And Max Pressure 100 Psi (689 KPA). The 2TM-ESW Comes With All Of The Parts Shown. Hall Effect Cable Sold Separately.

49C25
PART NO. 1033354

The 49C25 Is The Hall Effect Sensor With 25 Ft Of Cable For Use With The Autotrol Turbine Water Meters.

49C50
PART NO. 1033355

The 49C50 Is The Hall Effect Sensor With 50 Ft Of Cable For Use With The Autotrol Turbine Water Meters.

Copyright 2017 © Lakewood Instruments, LLC.
Printed in the USA, Rev A.4

ORDERING INFORMATION

PART NO.	DESCRIPTION	LIST	CD
	TURBINES		
1033238	1TM-ESW, 1" Turbine Meter With PVC Fittings	$105	R
3023532	1TM-NPT, 1" Turbine Meter With NPT Fittings	$129	R
1034080	2TM-ESW, 2" Turbine Meter With PVC Fittings	$350	R
3023536	2TM-NPT, 2" Turbine Meter With NPT Fittings	$381	R
	SENSOR CABLES (1 Required For Each Turbine)		
1033354	49C25, 25 Ft Cable For Turbine Meter	$60	R
1033355	49C50, 50 Ft Cable For Turbine Meter	$119	R
	1 INCH TURBINE METER REPLACEMENT PARTS		
1033317	1 Inch Replacement Turbine Meter, 400B418-701	$77	R
1030541	Gasket 1 Inch	$5	R
3014631	Turbine Nut 1 Inch for NPT Stainless Steel	$16	R
1034385	Turbine Nut 1 Inch for ESW PVC	$5	R
3014557	Adapter 1 Inch NPT Stainless Steel	$27	R
1030579	Adapter 1 Inch ESW PVC	$12	R
	2 INCH TURBINE METER REPLACEMENT PARTS		
1033358	2 Inch Replacement Turbine Meter, 480B78G1	$227	R
3030498	Gasket 2 Inch	$16	R
1030664	Turbine Nut 2 Inch for NPT SS and PVC ESW	$28	R
3014558	Adapter 2 Inch NPT Stainless Steel	$38	R
1030666	Adapter 2 Inch ESW PVC	$28	R

Copyright 2017 © Lakewood Instruments, LLC.
Printed in the USA, Rev A.4

CARLON MRS® SERIES INDUSTRIAL CONTACTING HEAD MULTI-JET WATER METERS

Carlon MRS® industrial electric contacting multi-jet meters are an economical answer for industrial applications needing good tolerance to contaminants, an electrical output signal and total volume registration. With an easy to read register display, the MRS® water meter is designed with reliability and affordability in mind. The MRS® series meter is available in sizes from 3⁄4" to 2". Carlon's MRS® Industrial meters meet or exceed AWWA specifications.

TYPICAL APPLICATIONS

- Cooling tower and boiler water treatment
- Proportional feed of chemicals
- Wide flow range
- Remote totalizing
- Automatic regeneration

FEATURES

- Low-cost accuracy
- Wide flow range
- Low maintenance

Specifications

Materials	Cast Bronze
Temperature	35°F - 122°F (50°C) Protect from freezing
Max Pressure	Maximum 150 psi (10.3 bar)
pH Range	6.5-8.0pH
Accuracy	+/- 1.5% of max flow
Max Current	100 mA
Max Voltage	24 VDC
Cable Length	6 FT.

Copyright 2017 © Lakewood Instruments, LLC.
Printed in the USA, Rev A.4

METER SELECTION CHART

METER / PIPE SIZE	MODEL	*CONTINUOUS FLOW	FLOW RANGE	LENGTH	HEIGHT	WIDTH	CONNECTION LENGTH (X2)
⅝" X ¾"	750MRS	10 GPM	¼ - 20 GPM	7½"	4¼"	3⅝"	2"
¾" X ¾"	7575MRS	15 GPM	½ - 30 GPM	7½"	4⅜"	3⅞"	2"
1"	1000MRS	25 GPM	¾ - 50 GPM	10¼"	4½"	4"	2¼"
1½"	150MRS	50 GPM	1½-100 GPM	11⅞"	6"	5"	2⅜"
2"	200MRS	80 GPM	2 - 160 GPM	11⅞"	7"	6½"	2¾"

***Continuous Flow:** The size of meter selected should be based upon continuous flow, GPM, as opposed to pipe size. For example, if it is determined that continuous flow is 25 GPM, a 1" meter should be selected rather than a 3/4"meter.

ORDERING INFORMA TION

PART NO.	DESCRIPTION	LIST	CD
1269624	750MRS, 3/4"NPT, 1 GPC	$168	R
1269625	750MRS, 3/4"NPT, 10 GPC	$168	R
1269626	750MRS, 3/4"NPT, 100 GPC	$168	R
1269627	7575MRS, 3/4"NPT, 1 GPC	$199	R
1269628	7575MRS, 3/4"NPT, 10 GPC	$199	R
1269629	7575MRS, 3/4"NPT, 100 GPC	$199	R
1269630	1000MRS, 1"NPT, 1 GPC	$240	R
1269631	1000MRS, 1"NPT, 10 GPC	$240	R
1269632	1000MRS, 1"NPT, 100 GPC	$240	R
1269633	150MRS, 1.5"NPT, 1 GPC	$450	R
1269634	150MRS, 1.5"NPT, 10 GPC	$450	R
1269635	150MRS, 1.5"NPT, 100 GPC	$450	R
1269636	200MRS, 2"NPT, 1 GPC	$580	R
1269637	200MRS, 2"NPT, 10 GPC	$580	R
1269638	200MRS, 2"NPT, 100 GPC	$580	R

Copyright 2017 © Lakewood Instruments, LLC.
Printed in the USA, Rev A.4

MJR SERIES CONTACTING HEAD WATER METERS

The MJR Series Pulse Meters offer pulse output from a reed switch sensor. This allows the two-wire contact type closure to operate metering pumps, remote indicators and controls.

TYPICAL APPLICATIONS

- Cooling tower and boiler water treatment
- Proportional feed of chemicals
- Wide flow range
- Remote totalizing
- Automatic regeneration

FEATURES

- Low-cost accuracy
- Wide flow range
- Low maintenance

MJR Series Specifications

Materials	
Case	Cast Bronze
Magnet	Ceramic Permanent
Internals	Engineered Thermoplastic
Temperature	105°F (40°C)
Max Pressure	150 psi (10.3 bar)
Accuracy	1/2 to 1% of reading
Max Current	50 mA
Max Voltage	24 VDC
Cable Length	12 ft

Flow Rates (GPM)				
	3/4 inch	1 inch	1 1/2 inch	2 inch
Min	0.25	0.30	0.50	1.00
Max	0.25	50	100	130

Copyright 2017 © Lakewood Instruments, LLC.
Printed in the USA, Rev A.4

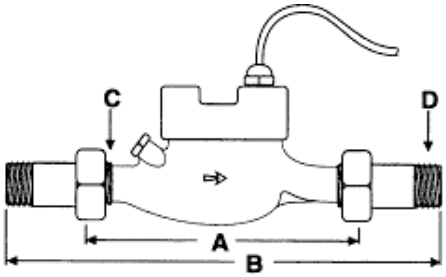

Dimensions

	¾"	1"	1-½"	2"
A (body)	7-½"	10-¾"	12-5/8"	10-5/8"
B (w/couplings)	12-5/8"	16-1/8"	18-½"	16-7/8"
C (IPS thread)	1"	1-¼"	2"	2-½"
D (NPT thread)	¾"	1"	1-½"	2"

Typical Pressure Drop Curve

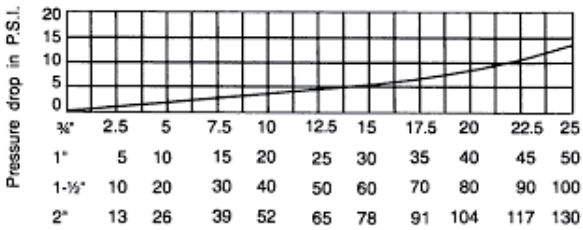

Rate of flow in gallons per minute (GPM

ORDERING INFORMATION

PART NO.	DESCRIPTION	LIST	CD
1169381	MJR3/4-1, 3/4 inch MNPT brass, 1 GPC	CF	R
1169385	MJR3/4-10, 3/4 inch MNPT brass, 10 GPC	CF	R
1166729	MJR3/4-100, 3/4 inch MNPT brass, 100 GPC	CF	R
1169382	MJR1-1, 1 inch MNPT brass, 1 GPC	CF	R
1169386	MJR1-10, 1 inch MNPT brass, 10 GPC	CF	R
1166730	MJR1-100, 1 inch MNPT brass, 100 GPC	CF	R
1169383	MJR1 1/2-1, 1 1/2 inch MNPT brass, 1 GPC	CF	R
1169387	MJR1 1/2-10, 1 1/2 inch MNPT brass, 10 GPC	CF	R
1166731	MJR1 1/2-100, 1 1/2 inch MNPT brass, 100 GPC	CF	R
1169384	MJR2-1, 2 inch MNPT brass, 1 GPC	CF	R
1169388	MJR2-10, 2 inch MNPT brass, 10 GPC	CF	R
1166732	MJR2-100, 2 inch MNPT brass, 100 GPC	CF	R

"CF - Consult Factory"

Copyright 2017 © Lakewood Instruments, LLC.
Printed in the USA, Rev A.4

WTC SERIES TURBINE WATER METER

The Series WTC Turbine Meters offer accurate, economical reading of high flows with low head loss.

WTC Series Specifications

Materials	
Meter Body	Painted Carbon Steel
Turbine Insert	Delrin
Turbine Rotor	Delrin
Shafts	Tungston Carbide
Bearings	Sapphire Journal
Pressure	200 psi (13.8 bar)
Temperature	140°F (60°C)
Accuracy	± 1%

Flow Rates (GPM)			
	2 inch	3 inch	4 inch
Min	2	3	6
Max	150	400	600

ORDERING INFORMATION

PART NO.	DESCRIPTION	LIST	CD
1167646	WTC-2, 2 inch turbine water meter, 10 inch length	CF	R
1167647	WTC-3, 3 inch turbine water meter, 12 inch length	CF	R
1104233	WTC-4, 4 inch turbine water meter, 14 inch length	CF	R

"CF - Consult Factory"

Available for the Model 2000e Series and NexSys® product lines only.
For special applications please contact Lakewood Instruments

Copyright 2017 © Lakewood Instruments, LLC.
Printed in the USA, Rev A.4

CONDENSATE CONTROLLERS

Copyright 2017 © Lakewood Instruments, LLC.
Printed in the USA, Rev A.4

LAKEWOOD INSTRUMENTS MODEL 1575e WATER TREATMENT CONTROLLER

The Model 1575e uses the latest in microprocessor capability, giving the user a high level of application flexibility. A large illuminated graphics screen, multiple inputs, and very easy setup characterize this new technology. The Model 1575e is ETL approved.

PART NUMBER 1229239 SHOWN
Condensate Controller, Controller Only.

FEATURES

- Removable power cord and receptacles for simple conduit installations.
- Scheduled feed, which can use three relays for biocides or other chemicals.
- Two (2) water meter inputs, two (2) drum switch inputs, conductivity input, flow switch input, 4-20 mA output, and remote conductivity input via 4-20 mA are all standard features.
- Designed with a single circuit board for better reliability and lower cost.
- Large open shallow enclosure for easy wiring.
- Ball valve delay feature allows accurate control of motorized ball valves.
- Heavy-duty stainless steel domed numeric keypad and illuminated graphical display allow for quick and easy programming. Steel domed switches improve the tactile sensing and life expectancy of the keypad.
- LED indicators for power, alarm and relay status.

BENEFITS

- Easy to program with the Lakewood plain English, intuitive, and user friendly menu interface.
- Controller can be used in boiler, cooling tower, or condensate applications when used with the appropriate conductivity sensor.
- Single circuit board design improves reliability.
- No add-on options. 4-20 mA output and feed schedule clock features are standard.

SPECIFICATIONS

Conductivity range	**1-10 or 10-100 µS**
Conductivity sensor	**2 electrode**
Conductivity Resolution	**± 1 µS (conductivity <100 µS)**
Temperature comp.	**500NTC, NONE**
Accuracy & repeatability	**± 1.0%**
Deadband/Setpoint	**Programmable**
Auto/Manual outputs	**Menu selectable**
Keypad	**16 tactile push-buttons**
Display	**illuminated 128x64 pixel LCD**
Drum Switch Inputs	**2 digital contact inputs**
Water meter inputs (2)	**Contact head, paddle wheel or turbine**
Timers	**Max. blowdown time exceeded and relay run time exceeded**
Output Signal	**One 4 – 20 mA, isolated or non-isolated optionally powered output for conductivity**

Input Signal	**One 4-20 mA, non- isolated internally powered input for conductivity**
Output relays	**4, 3 selectable use, 1 blowdown**
Relay ratings	**3A each, 10A total**
Power	**120/240 VAC 50/60 Hz**
Ambient	**32° - 120°F (0 - 49°C)**
Enclosure	**NEMA 4X, ETL**

Intertek

Sensors/Plumbing	**Condensate**
Max Pressure	70 psi (4.8 bar)
Max Temp	392°F (200°C)
Min Flow	1 gpm (3.785 Lpm)

Copyright 2017 © Lakewood Instruments, LLC.
Printed in the USA, Rev A.4

CONDENSATE SENSOR OPTIONS

540K. 1-4-TC500

-101

-10R

540K.01-TC500

ORDERING INFORMATION

PART NO.	DESCRIPTION	LIST	CD
1229239	1575e Controller Only, No Sensor	$1,075	W

PART NO.	CONDENSATE SENSORS	LIST	CD
1104591	540K.1-4-10I-10, with 3⁄4 Inch NPT Inline, 10-100µs	$588	R
1168617	540K.1-4-10R-18, with 1.0 Inch NPT Retractable, 10-100µs	$753	R
1104592	540K.01-4-10I-10, with 3⁄4 Inch NPT Inline, 1-10µs	$1,088	R
1169642	540K.01-4-10R-18, with 1.0 Inch NPT Retractable, 1-10µs	$1,253	R

Notes: The model 1575e reads in whole numbers only. All cable lengths are 20 feet.

PART NO.	CONDENSATE SENSOR REPLACEMENT TIPS	LIST	CD
1169054	540K.1-TC500 10-100µS	$426	R
1169055	540K.01-TC500 1-10µS	$925	R

Copyright 2017 © Lakewood Instruments, LLC.
Printed in the USA, Rev A.4

LAKEWOOD INSTRUMENTS MODEL 1520/30e pH or ORP WATER TREATMENT CONTROLLER

The Model 1520/30e uses the latest in microprocessor capability, giving the user a high level of application flexibility in pH or ORP control. The user in the field can configure this controller to operate as a pH or an ORP controller. A large illuminated graphics screen, multiple inputs, and very easy setup characterize this new technology. Water meters, sensors and plumbing assemblies are purchased separately.

PART NUMBER 1240475 SHOWN
Cooling Tower Water Treatment Controller

FEATURES

- Removable power cord and receptacles for simple conduit installations.
- Scheduled feed, which can use three relays for biocides or other chemicals.
- Two (2) water meter inputs, two (2) drum switch inputs, pH or ORP input, flow switch input, and 4-20 mA output are all standard features.
- A 4-20 mA Input for remote pH or ORP applications can be used in place of the standard pH or ORP input.
- Designed with a single circuit board for better reliability and lower cost.
- Large open shallow enclosure for easy wiring.
- Heavy-duty stainless steel domed numeric keypad and illuminated graphical display allow for quick and easy programming. Steel domed switches improve the tactile sensing and life expectancy of the keypad.
- LED indicators for power, alarm and relay status.

BENEFITS

- Easy to program with the Lakewood plain English, intuitive, and user friendly menu interface.
- Controller can be removed from a cooling tower and be placed in another type of application when used with the appropriate pH or ORP sensor.
- Single circuit board design improves reliability.
- No add-on options. 4-20 mA output and feed schedule clock features are standard.

SPECIFICATIONS

pH range	2-12 pH
ORP range	-1000 to +1000 mV
Sensor Types	Solution ground, Signal differential, or Single-Ended
Resolution	±.10pHor1mV
Accuracy & repeatability	± 1.0%
Deadband/Setpoint	Adjustable
Auto/Manual outputs	Menu selectable
Keypad	16 tactile push-buttons
Display	Illuminated 128x64 pixel LCD
Drum Switch Inputs	2 digital contact inputs
Water meter inputs (2)	Contact head, paddle wheel or turbine

Timer	Relay run time exceeded
Output Signal	One 4 – 20 mA, non-isolated isolated powered output
Output relays	4 selectable use
Relay ratings	3A each, 10A total
Power	120/240 VAC 50/60 Hz
Ambient	30˚ - 120˚F (0-49˚C)
Enclosure	NEMA 4X, ETL

Sensors/Plumbing	**Condensate**
Max Pressure	70 psi (4.8 bar)
Max Temp	230°F (110°C)
Min Flow	1 gpm (3.785 Lpm)

Copyright 2017 © Lakewood Instruments, LLC.
Printed in the USA, Rev A.4

CONDENSATE SENSOR OPTIONS

1165305 520-4-7I-10-STD
Condensate pH Sensor With
3/4 In NPT Inline Fitting

1167983 520-4-7R-18-STD
Condensate pH Sensor With
1.0 In NPT Retractable

ORDERING INFORMATION

PART NO.	DESCRIPTION	LIST	CD
1240475	1520/30e controller only, no sensor	$1,225	W

PART NO.	CONDENSATE SENSORS	LIST	CD
1165305	520-4-7I-10-STD	$525	R
1167983	520-4-7R-18-STD	$690	R

PART NO.	REPLACEMENT PARTS	LIST	CD
1263221	pH or ORP transmitter	$368	R
1167304	5207-STD Replacement pH Sensor Tip	$362	R

Note: All cable lengths are 15 feet.

Copyright 2017 © Lakewood Instruments, LLC.
Printed in the USA, Rev A.4

BOILER CONTROLLERS

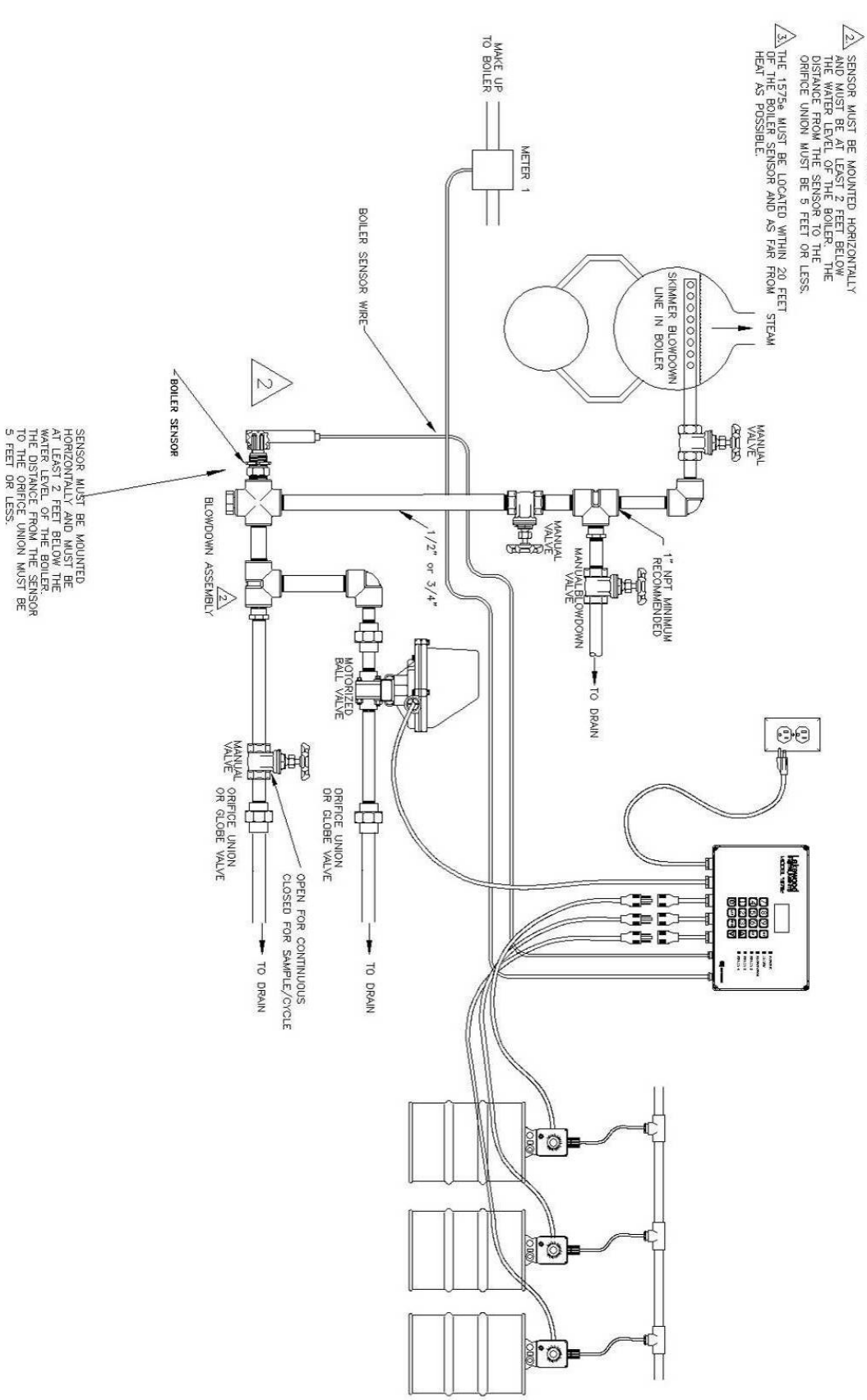

Copyright 2017 © Lakewood Instruments, LLC.
Printed in the USA, Rev A.4

LAKEWOOD INSTRUMENTS MODEL 150 BOILER WATER TREATMENT CONTROLLER

The Model 150 uses the latest in microprocessor capability, giving the user a high level of application flexibility. Multiple inputs and very easy setup characterize this new technology. This controller can be used in the Continuous Sample, Sample/Cycle, or Sample/Hold modes to control the boiler water conductivity.

PART NUMBER 1269089 SHOWN
Boiler Water Treatment Controller

FEATURES

- Use this Controller for conductivity control of boilers. It can be used for Continuous Sample, Sample/Cycle, or Sample/Hold control of boiler conductivity.
- Removable power cord and receptacles for simple conduit installations.
- One (1) water meter input, conductivity input, flow switch input, and 4-20 mA output are all standard features.
- Designed with a single circuit board for better reliability and lower cost.
- Large open shallow enclosure for easy wiring.
- The enclosure is rated NEMA 4X.
- Power selector switch for 115 or 230 vac operation.
- Heavy-duty stainless steel domed numeric keypad and illuminated graphical display allow for quick and easy programming. Steel domed switches improve the tactile sensing and life expectancy of the keypad.
- LED indicators for power, alarm and relay status.
- The display is lit by two LEDs when any key is pressed.

BENEFITS

- Easy to program, the Model 150 Controller uses an intuitive menu and a numeric keypad for programming.
- No add-on options. Flow switch input, 4-20mA output, and three boiler conductivity control methods; Continuous Sample, Sample/Cycle, and Sample/Hold are standard.
- Single circuit board design improves reliability.
- Multiple methods of chemical feed for application flexibility.

SPECIFICATIONS

Conductivity Range	100-10,000 µS
Conductivity Sensor	2-Electrode
Conductivity Resolution	± 10 µS
Accuracy & Repeatability	± 1%
Deadband/Setpoint	Adjustable
Auto/Manual Outputs	Menu Selectable
Output Relays	2 Selectable use 1 for Blowdown
Keypad	16 Tactile Push-Buttons
Display	16 X 2 Character

Water Meter Input	Contact Head, Paddle Wheel, Or Turbine
Timer	Max Blowdown Time Exceeded, Relay Time Exceeded
Output Signal	One 4-20 mA, non-Isolated Powered Output
Relay Ratings	3A Each, 10A Total
Power	120/240 VAC 50/60 Hz
Ambient	32°-120°F (0-49°C)
Enclosure	NEMA 4X, ETL

Intertek

Copyright 2017 © Lakewood Instruments, LLC.
Printed in the USA, Rev A.4

BOILER SYSTEM OPTIONS

1168374 SR2
Boiler Water Sensor with 20 Ft Cable
and Conduit Elbow.
3/4 INCH NPT Connection.

1167244 Orifice Union
1/2 INCH NPT
Orifice Plates, 1/2 in NPT 1166354 1/8
inch opening 1166355 1/16 inch opening

1268608 MBV1
1/2 INCH NPT
Motorized ball valve OR
1268614 MBV2
3/4 INCH NPT
Motorized ball valve

ORDERING INFORMATION

PART NO.	CONDUCTIVITY BOILER WATER CONTROLLER ONLY	LIST	CD
1269089	150 Controller only, no sensor	$778	W

PART NO.	CONDUCTIVITY BOILER WATER CONTROLLER SYSTEMS	LIST	CD
	The Following Systems Include Sensor and Plumbing Assemblies motorized ball valves are purchased separately		
1269092	150, SR2, 1/2 Union, Orifice plate,	$1,295	W
1269260	150, SR2, 3/4 Union, Orifice plate,	$1,305	W
1269093	150, SR2, PLKT	$1,722	W

PART NO.	BOILER OPTIONS (AND/OR REPLACEMENT PARTS)	LIST	CD
1168374	SR2, 2-electrode boiler sensor, conduit elbow, and 20 ft cable	$392	W
1229843	SR2HD, 2-elec harsh duty sensor, conduit elbow, and 20 ft cable	$603	W
1167244	Orifice Union, 1/2 inch NPT	$86	R
1166355	Orifice Plate, 1/2 inch NPT, 1/16	$39	R
1166356	Orifice Plate, 1/2 inch NPT, 1/4	$39	R
1166354	Orifice Plate, 1/2 inch NPT, 1/8	$39	R
1167972	Orifice Plate, 1/2 inch NPT, 3/8	$39	R
1167245	Orifice Union, 3/4 inch NPT	$96	R
1168998	Orifice Plate, 3/4 inch NPT, 1/16	$39	R
1169000	Orifice Plate, 3/4 inch NPT, 1/4	$39	R
1168999	Orifice Plate, 3/4 inch NPT, 1/8	$39	R
1169001	Orifice Plate, 3/4 inch NPT, 3/8	$39	R
1268608	MBV1 1/2 inch NPT Motorized ball valve	$746	R
1268614	MBV2 3/4 inch NPT Motorized ball valve	$773	R
1167295	PL5, 1/2 sample/cycle plumbing assembly	$217	W
1168601	PL575, 3/4 sample/cycle plumbing assembly	$237	W
1167297	PL6, 1/2 continuous plumbing assembly	$476	W
1167296	PL675, 3/4 continuous plumbing assembly	$496	W
1167520	GV, Globe valve with Position Indicator	$490	R
1269395	GVN, Globe valve without Position Indicator	$296	R
1233981	PLKT Plumbing kit. 1/2" sample/cycle and continuous sample kit Includes unions, orifice plates, cross, tee, and manual block valve only.	$552	W

PART NO.	REPLACEMENT SENSORS	LIST	CD
1167162	2 electrode boiler sensor	$332	W
1229841	2 electrode harsh duty boiler sensor	$555	W

Copyright 2017 © Lakewood Instruments, LLC.
Printed in the USA, Rev A.4

LAKEWOOD INSTRUMENTS MODEL 1575e WATER TREATMENT CONTROLLER

The Model 1575e uses the latest in microprocessor capability, giving the user a high level of application flexibility. A large illuminated graphics screen, multiple inputs, and very easy setup characterize this new technology. The Model 1575e is ETL approved.

PART NUMBER 1229239 SHOWN
Boiler Controller, Controller Only.

FEATURES

- Removable power cord and receptacles for simple conduit installations.
- Scheduled feed, which can use three relays for biocides or other chemicals.
- Two (2) water meter inputs, two (2) drum switch inputs, conductivity input, flow switch input, 4-20 mA output, and remote conductivity input via 4-20 mA are all standard features.
- Designed with a single circuit board for better reliability and lower cost.
- Large open shallow enclosure for easy wiring.
- Ball valve delay feature allows accurate control of motorized ball valves.
- Heavy-duty stainless steel domed numeric keypad and illuminated graphical display allow for quick and easy programming. Steel domed switches improve the tactile sensing and life expectancy of the keypad.
- LED indicators for power, alarm and relay status.

BENEFITS

- Easy to program with the Lakewood plain English, intuitive, and user friendly menu interface.
- Controller can be used in boiler, cooling tower, or condensate applications when used with the appropriate conductivity sensor.
- Single circuit board design improves reliability.
- No add-on options. 4-20 mA output and feed schedule clock features are standard.

SPECIFICATIONS

Conductivity range	500-8000 µS for Boilers
Conductivity sensor	2 electrode
Conductivity Resolution	± 10 µS (conductivity <5000 µS) ± 100µS (conductivity <5000 µS)
Temperature comp.	500NTC, NONE
Accuracy & repeatability	± 1.0%
Deadband/Setpoint	Programmable
Auto/Manual outputs	Menu selectable
Keypad	16 tactile push-buttons
Display	illuminated 128x64 pixel LCD
Drum Switch Inputs	2 digital contact inputs
Water meter inputs (2)	Contact head, paddle wheel or turbine
Timers	Max. blowdown time exceeded and relay run time exceeded
Output Signal	One 4 – 20 mA, isolated or non-isolated optionally powered output for conductivity

Input Signal	**One 4-20 mA, non- isolated internally powered input for conductivity**
Output relays	**4, 3 selectable use, 1 blowdown**
Relay ratings	**3A each, 10A total**
Power	**120/240 VAC 50/60 Hz**
Ambient	**32° - 120°F (0 - 49°C)**
Enclosure	**NEMA 4X, ETL**

Intertek

Sensors/Plumbing	**Boiler**
Max Pressure	600 psi (41.3 bar)
Max Temp	486°F (252°C)

Copyright 2017 © Lakewood Instruments, LLC.
Printed in the USA, Rev A.4

BOILER SYSTEM OPTIONS

1168374 SR2
Boiler Water Sensor with 20 Ft Cable
and Conduit Elbow.
3/4 INCH NPT Connection.

1167244 Orifice Union
1/2 INCH NPT
Orifice Plates, 1/2 in NPT 1166354 1/8
inch opening 1166355 1/16 inch opening

1268608 MBV1
1/2 INCH NPT
Motorized ball valve OR
1268614 MBV2
3/4 INCH NPT
Motorized ball valve

ORDERING INFORMATION

PART NO.	CONDUCTIVITY BOILER WATER CONTROLLER ONLY	LIST	CD
1229239	1575e Controller only, no sensor	$1,075	W

PART NO.	CONDUCTIVITY BOILER WATER CONTROLLER SYSTEMS	LIST	CD
	The Following Systems Include Sensor and Plumbing Assemblies motorized ball valves are purchased separately		
1229244	1575e, SR2, 1/2"Union, Orifice plate	$2,612	W
1229245	1575e, SR2, 3/4"Union, Orifice plate	$2,663	W
1229243	1575e, SR2, PLKT	$2,019	W
1269004	1575e, SR2, PL5,	$2,704	W

PART NO.	BOILER OPTIONS (AND/OR REPLACEMENT PARTS)	LIST	CD
1168374	SR2, 2-electrode boiler sensor, conduit elbow, and 20 ft cable	$392	W
1229843	SR2HD, 2-elec harsh duty sensor, conduit elbow, and 20 ft cable	$603	W
1167244	Orifice Union, 1/2 inch NPT	$86	R
1166355	Orifice Plate, 1/2 inch NPT, 1/16	$39	R
1166356	Orifice Plate, 1/2 inch NPT, 1/4	$39	R
1166354	Orifice Plate, 1/2 inch NPT, 1/8	$39	R
1167972	Orifice Plate, 1/2 inch NPT, 3/8	$39	R
1167245	Orifice Union, 3/4 inch NPT	$96	R
1168998	Orifice Plate, 3/4 inch NPT, 1/16	$39	R
1169000	Orifice Plate, 3/4 inch NPT, 1/4	$39	R
1168999	Orifice Plate, 3/4 inch NPT, 1/8	$39	R
1169001	Orifice Plate, 3/4 inch NPT, 3/8	$39	R
1268608	MBV1 1/2 inch NPT Motorized ball valve	$746	R
1268614	MBV2 3/4 inch NPT Motorized ball valve	$773	R
1167295	PL5, 1/2 sample/cycle plumbing assembly	$217	W
1168601	PL575, 3/4 sample/cycle plumbing assembly	$237	W
1167297	PL6, 1/2 continuous plumbing assembly	$476	W
1167296	PL675, 3/4 continuous plumbing assembly	$496	W
1167520	GV, Globe valve with Position Indicator	$490	R
1269395	GVN, Globe valve without Position Indicator	$296	R
1233981	PLKT Plumbing kit. 1/2" sample/cycle and continuous sample kit Includes unions, orifice plates, cross, tee, and manual block valve only.	$552	W

Copyright 2017 © Lakewood Instruments, LLC.
Printed in the USA, Rev A.4

PART NO.	REPLACEMENT SENSORS	LIST	CD
1167162	2 electrode boiler sensor	$332	W
1229841	2 electrode harsh duty boiler sensor	$555	W

Copyright 2017 © Lakewood Instruments, LLC.
Printed in the USA, Rev A.4

NexSys® Boiler Control System

The **NexSys®** control system is the latest in a long line of reliable, easy to use controllers from Lakewood Instruments. The **NexSys®** control system uses the latest in microprocessor technology with a 5.7" **Color Touch Screen** interface for a high level of application flexibility.

All features, parameters, settings, and functional requirements to operate, program, and monitor the **NexSys®** control system are accessible from the touch screen and DO NOT require the use of an external input, PC or device to operate or access. The **NexSys®** control system even includes On-Board Help Screens with wiring, programming, and maintenance instructions.

The **NexSys®** control system comes standard with the following system interfaces and DMX outputs: LON EIA 709 FTT10, BACnet IP, and MODbus TCP. The unit comes from the factory ready to integrate readings into a BAS, including: The state of any installed relay (On/Off) , Water meter readings, Conductivity readings, Additional sensor readings (ph, ORP), sensor alarms, Additional 4-20mA input readings, Flow condition, and other digital inputs.

The **NexSys®** control system comes standard with Ethernet capability through a browser (HTML5) interface that allows 100% access to all features and control parameters of the controller.

Copyright 2017 © Lakewood Instruments, LLC.
Printed in the USA, Rev A.4

The **NexSys®** control system has an astounding array of built-in features such as:

- LonWorks, MODbus, and BACnet communications interface
- Ethernet capability through an HTML interface
- The capability to send E-service reports to a subscribed service
- The ability to display operating values with time and date stamps on color coded graphs with zoom and scroll features
- Up to four boiler conductivity sensor inputs and two pH sensor inputs
- Trace chemistry capable
- Two water meter inputs
- Enclosure is NEMA 4X rated
- Two flow switch inputs configurable to any relay output with expansion capability to four
- Ability to add up to eight 4-20mA input readings
- Ability to mount every sensor/input up to 400 meters away from the controller via 4-wire twisted pair
- Ability to control the blowdown of four boilers at the same time
- Six relay outputs expandable to ten relay outputs for user configurable operations such as:
  - Blowdown Valve Control by Sample/Cycle, Continuous Sample
  - Feed by Percent of Blowdown Time
  - Feed by Setpoint with Percent of Time Feature as Part of Spaced Feed
  - Trace Chemistry Control
  - By Makeup Totalized Gallons
  - By Blowdown Totalized Gallons
  - By Percent On-Time
  - By Scheduled Feed by Day and Time
- On-board Help Screens with wiring, programming, and maintenance instructions

SPECIFICATIONS

Touch Screen Interface:
5.7" diagonal viewing area
Display size: 115X86 mm
Pixel: 320X240
Color: TFT 65536
Backlight: LED or CCFL
Power: 120/240 VAC 50/60 Hz

Intertek

Relay ratings:
120VAC 3A per relay 15A total
Enclosure: NEMA 4X

Copyright 2017 © Lakewood Instruments, LLC.
Printed in the USA, Rev A.4

NexSys® The Next Generation in Reliable Controllers

NexSys™ Boiler System Config	Price	Type	1-4 / A, B or XX	-	1-4 / A, B or XX	1-4 / A, B or XX	-	1-4 / A, B or XX	-	1-4 or X	T, H or X	I, R or X	S, L or X	-	S, D or X	S, D or X	-	4, 8 or X	4, 8 or X	-	S,L or X	-	XX
		NXB		-			-		-					-			-			-		-	
Boiler Systems	$3,130																						
Boiler Probe Kit (1-4/ A = STD, B = HD) (Max 4 Cond sensors per system incl Condensate)	A = $897 B = $959																						
Sample Cycle Plumbing (1-4/ A = .50, B = .75)	A = $217 B = $237																						
Continuous Sample Plumbing (1-4/ A = .50, B = .75)	A = $476 B = $496																						
Motorized Ball Valve (1-4/ A = .50, B = .75)	A = $1,020 B = $1,061																						
Condensate Probe Kit (INCLUDES k.1, inline, 10 inch sensor) (Max 4 Cond sensors per system incl Boiler)	$1,442																						
Condensate Cell Constant (T = 0.10 or H = 0.01)	T = INCL H = $92																						
Condensate Fitting (I = Insert or R = Retract)	I = INCL R = $107																						
Condesate Sensor Length (S = 10" or L = 18")	S = INCL L = $20																						
Relays (S = 6 or D = 10)	S = INCL D = $750																						
Flow Switch Inputs (S=2 or D=4)	S = INCL D = $382																						
4-20MA Input (4 or 8)	4 = $488 8 = $976																						
4-20mA Output (4 or 8)	CONSULT FACTORY																						
2nd Remote Display (S = 5.7" L = 15")	S = $1,250 L = $3,000																						
Custom Designator (-XX)	CONSULT FACTORY																						

X = No Option Needed

Pricing is for each.

All items are code W except 2nd remote display which is a code D

EXAMPLE:

A system that would include 1 boiler using sample/cycle control with 1/2" plumbing and motorized ball valve, and 1 condensate system with conductivity between 10-100uS using a 10" insertion sensor, would look like:

$6,706	NXB	1A	-	1A	XX	-	1A	-	1	T	I	S	-	D	S	-	X	X	-	X	-	XX
	$3,130	$897		$217	0		$1,020		$1442	0	0	0		0	0		0	0		0		0

Copyright 2017 © Lakewood Instruments, LLC.
Printed in the USA, Rev A.4

Designed by TR Designs

BOILER ACCESSORIES AND REPLACEMENT PARTS

Copyright 2017 © Lakewood Instruments, LLC.
Printed in the USA, Rev A.4

Boiler Sensor SR2
Part no.1168374

The SR2, 2 electrode sensor with conduit elbow and 20 foot cable. The SR2 is used for monitoring conductivity in a boiler blowdown line.
The SR2 **cannot** be used after a sample cooler.

Body	316 SS
Electrodes	416 SS
Max Pressure	600 psi (41.4 bar)
Max Temperature	486°F (252°C)
Cable	20 ft High temp
Process thread	3⁄4 inch MNPT
Conduit connection	3⁄4 inch MNPT

Boiler Sensor SR2T
Part no. 1269392

The SR2, 2 electrode sensor with conduit elbow, 20 foot cable, and 3⁄4" cross. The SR2 is used for monitoring conductivity in a boiler blowdown line.
The SR2 **cannot** be used after a sample cooler.

Body	316 SS
Electrodes	416 SS
Max Pressure	600 psi (41.4 bar)
Max Temperature	486°F (252°C)
Cable	20 ft High temp
Process thread	3⁄4 inch MNPT
Conduit connection	3⁄4 inch MNPT

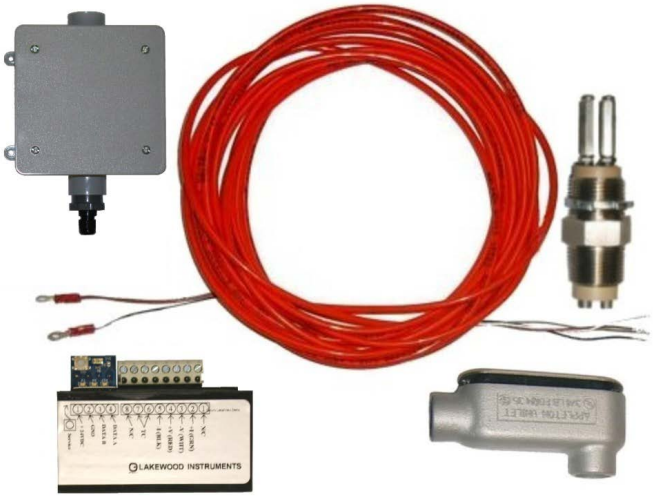

Boiler Sensor SR2N
Part no. 1169993

The SR2N, 2 electrode sensor with 20 foot cable and conductivity node. The SR2N is used for monitoring conductivity in a boiler blowdown line.
The SR2N **cannot** be used after a sample cooler.
For model 2255, 2855e, and NexSys® only.

Body	316 SS
Electrodes	416 SS
Max Pressure	600 psi (41.4 bar)
Max Temperature	486°F (252°C)
Cable	20 ft High temp
Process thread	3⁄4 inch MNPT
Conduit connection	3⁄4 inch MNPT

Copyright 2017 © Lakewood Instruments, LLC.
Printed in the USA, Rev A.4

Boiler Sensor SR2HD
Part No. 1229843

The SR2HD, 2 electrode sensor with conduit elbow and 20 foot cable. The SR2HD is used for monitoring conductivity in a boiler blowdown line where a harsh or high amine environment exists. The SR2HD **cannot** be used after a sample cooler.

Body	316 SS
Electrodes	416 SS
Max Pressure	600 psi (41.4 bar)
Max Temperature	486°F (252°C)
Cable	20 ft High temp
Process thread	3⁄4 inch MNPT
Conduit connection	3⁄4 inch MNPT

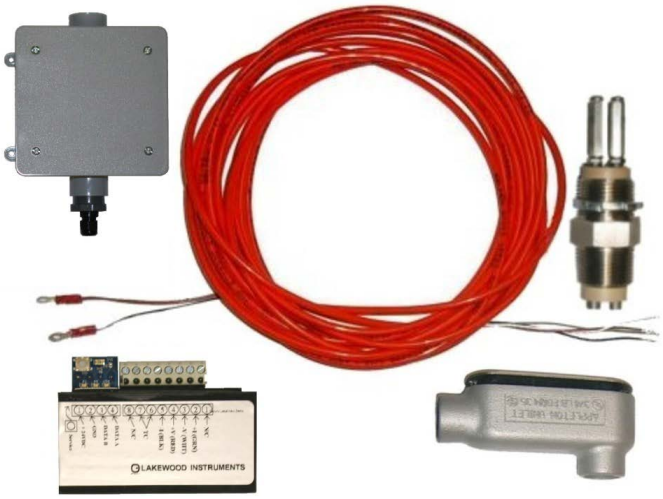

Boiler Sensor SR2NHD
Part No. 1235438

The SR2NHD, 2 electrode sensor with 20 foot cable and conductivity node. The SR2NHD is used for monitoring conductivity in a boiler blowdown line where a harsh or high amine environment exists. The SR2NHD **cannot** be used after a sample cooler. For model 2255, 2855e, and NexSys only.

Body	316 SS
Electrodes	416 SS
Max Pressure	600 psi (41.4 bar)
Max Temperature	486°F (252°C)
Cable	20 ft High temp
Process thread	3⁄4 inch MNPT
Conduit connection	3⁄4 inch MNPT

Boiler Sensor SR2P
Part No.1169878

The SR2P, 2 electrode sensor with conductivity preamp. The SR2P is used for monitoring conductivity in a boiler blowdown line.
The SR2P cannot be used after a sample cooler.
For model 250/260-2 only.

Body	316 SS
Electrodes	416 SS
Max Pressure	600 psi (41.4 bar)
Max Temperature	486°F (252°C)
Cable	20 ft High temp
Process thread	3⁄4 inch MNPT
Conduit connection	3⁄4 inch MNPT

Copyright 2017 © Lakewood Instruments, LLC.
Printed in the USA, Rev A.4

Boiler Sensor SR4
Part No. 1168375

The SR4, 4 electrode sensor with 20 foot cable. The SR4 can be in the boiler blowdown line or with a sample cooler. The SR4 can only be used with the model 2250 AND 2250e.

Body	316 SS
Electrodes	Titanium
Max Pressure	250 psi (17.2 bar)
Max Temperature	392°F (200°C)
Cable	20 ft High temp
Process thread	3⁄4 inch MNPT
Conduit connection	3⁄4 inch FNPT
Temperature comp	4K NTC

Boiler Sensor SR4N
Part No. 1169994

The SR4N, 4 electrode sensor with 20 foot cable and conductivity node. The SR4N can be in the boiler blowdown line or with a sample cooler. The SR4 can only be used with the model 2255, 2855e and NexSys®.

Body	316 SS
Electrodes	Titanium
Max Pressure	250 psi (17.2 bar)
Max Temperature	392°F (200°C)
Cable	20 ft High temp
Process thread	3⁄4 inch MNPT
Conduit connection	3⁄4 inch FNPT
Temperature comp	4K NTC

Boiler Sensor SR4P
Part No. 1167455

The SR4P, 4 electrode sensor with 20 foot cable and conductivity preamp. The SR4P is used for monitoring conductivity in a boiler blowdown line. For model 250/260-2 only.

Body	316 SS
Electrodes	Titanium
Max Pressure	250 psi (17.2 bar)
Max Temperature	392°F (200°C)
Cable	20 ft High temp
Process thread	3⁄4 inch MNPT
Conduit connection	3⁄4 inch FNPT
Temperature comp	4K NTC

Copyright 2017 © Lakewood Instruments, LLC.
Printed in the USA, Rev A.4

4 Electrode Boiler Sensor
(543-M-STD) Part No. 1168074

The 4 ELECTRODE BOILER SENSOR can be in the boiler blowdown line or with a sample cooler. The Boiler Sensor 4 Electrode can only be used with the 2250 and 2250e.

Body	316 SS
Electrodes	Titanium
Max Pressure	250 psi (17.2 bar)
Max Temperature	392°F (200°C)
Cable	20 ft High temp
Process thread	3⁄4 inch MNPT
Conduit connection	3⁄4 inch FNPT
Temperature comp	4K NTC

2 Electrode Boiler Sensor
Part no.1167162

The 2-ELECTRODE BOILER SENSOR is used for monitoring conductivity in a boiler blowdown line. The 2-electrode boiler sensor cannot be used after a sample cooler.

Body	316 SS
Electrodes	416 SS
Max Pressure	600 psi (41.4 bar)
Max Temperature	486°F (252°C)
Cable	20 ft High temp
Process thread	3⁄4 inch MNPT
Conduit connection	3⁄4 inch MNPT

2 Electrode Harsh Duty Boiler
Sensor Part no.1229841

The 2-ELECTRODE HARSH DUTY BOILER SENSOR is used for monitoring conductivity in a boiler blowdown line where a harsh or high amine environment exists.
The 2 electrode harsh duty boiler sensor cannot be used after a sample cooler.

Body	316 SS
Electrodes	416 SS
Max Pressure	600 psi (41.4 bar)
Max Temperature	486°F (252°C)
Cable	20 ft High temp
Process thread	3⁄4 inch MNPT
Conduit connection	3⁄4 inch MNPT

Copyright 2017 © Lakewood Instruments, LLC.
Printed in the USA, Rev A.4

PLKT Plumbing Kit
Part no.1233981

The 1⁄2 inch PLKT plumbing kit can be used for sample / cycle and continuous sample kit. Includes unions, orifice plates, cross, tee, and a manual block valve only. The PLKT plumbing kit does not include piping.

PL5
Part no. 1167295

The PL5 **1/2** inch cycle sample plumbing is used as a cycle sample method in boilers. The orifice restricts flow near the boiler sensor to prevent steam flashing during a sample. The PL6 can also be used as a PL5.

PL575
Part no. 1168601

The PL575 **3/4** inch cycle sample plumbing is used as a cycle sample method in boilers. The orifice restricts flow near the boiler sensor to prevent steam flashing during a sample. The PL675 can also be used as a PL575.

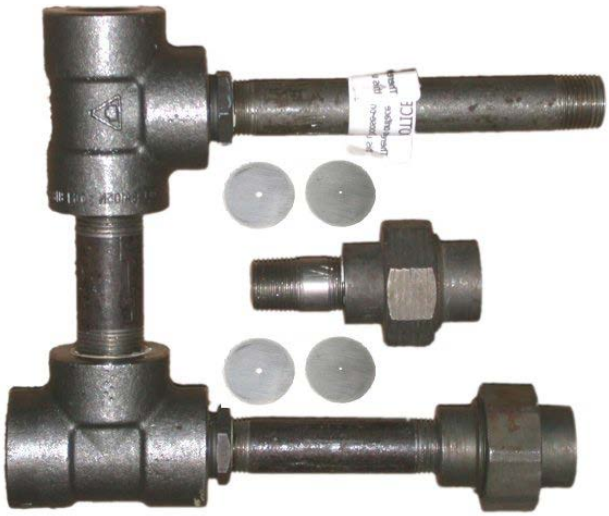

PL6
Part no. 1167297

The PL6 **1/2** inch continuous plumbing is used for a continuous sampling of a boiler. The lower orifice bleeds a small sample across the sensor. The upper orifice is used with the motorized ball valve and opens when the conductivity is above set point.

PL675
Part no. 1167296

The PL675 **3/4** inch continuous plumbing is used for a continuous sampling of a boiler. The lower orifice bleeds a small sample across the sensor. The upper orifice is used with the motorized ball valve and opens when the conductivity is above set point.

Copyright 2017 © Lakewood Instruments, LLC.
Printed in the USA, Rev A.4

-GV w/POSITION INDICATOR
Part no. 1167520

The GV is a **1/2** inch NPT Globe Valve with position indicator and is used for throttling or metering the flow restriction near the boiler sensor to prevent steam flashing.

-GVN w/o POSITION INDICATOR
Part no. 1269395

The GVN is a 1/2 inch NPT Globe Valve without a position indicator and is used for throttling or metering the flow restriction near the boiler sensor to prevent steam flashing.

ORIFICE PLATES

The ORIFICE PLATES for 1/2 and 3/4 inch NPT union, restrict flow near the boiler sensor to prevent steam flashing during a sample.

FOR 1/2 INCH UNIONS

1/16 inch Part no. 1166355
1/4 inch Part no. 1166356
1/8 inch Part no. 1166354
3/8 inch Part no. 1167972

FOR 3/4 INCH UNIONS

1/16 inch Part no. 1168998
1/4 inch Part no. 1169000
1/8 inch Part no. 1168999
3/8 inch Part no. 1169001

ORIFICE UNION 1/2 INCH NPT
Part no. 1167244

The ORIFICE UNION is a specially milled union for 1/2 orifice plates.

ORIFICE UNION 3/4 INCH NPT
Part no. 1167245

The ORIFICE UNION is a specially milled union for 3/4 inch orifice plates.

Copyright 2017 © Lakewood Instruments, LLC.
Printed in the USA, Rev A.4

MBV1
Part no. 1268608

Size: **1/2** inch NPT
Body: Carbon Steel
Rating: 400 psi (27.58 bar) @ 486°F (252°C)
Seals: Jamesbury XTREME®
Ball: 316 SS

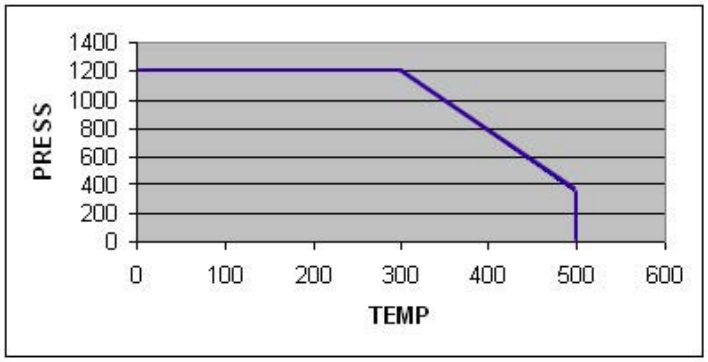

MBV2
Part no. 1268614

Size: **3/4** inch NPT
Body: Carbon Steel
Rating: 400 psi (27.58 bar) @ 486°F (252°C)
Seals: Jamesbury XTREME®
Ball: 316 SS

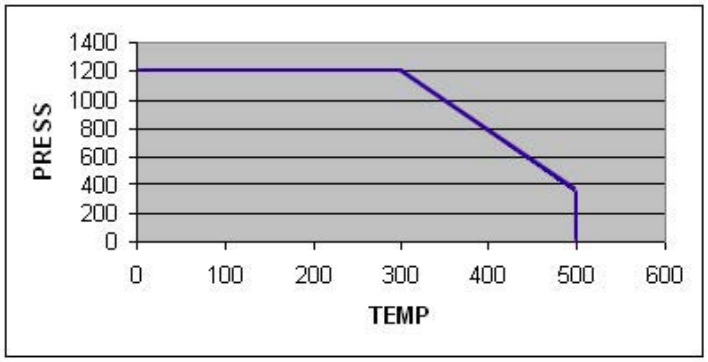

Copyright 2017 © Lakewood Instruments, LLC.
Printed in the USA, Rev A.4

Boiler Controller Replacement Parts

PART NO.	DESCRIPTION	LIST	CD
1168374	SR2, 2 electrode boiler sensor, conduit elbow and 20 ft cable	$392	W
1269392	SR2T, 2 electrode boiler sensor, conduit elbow, 20 ft cable, and cross	$438	W
1229843	SR2HD, 2 electrode harsh duty sensor, conduit elbow, 20 ft cable	$603	W
1169993	SR2N, 2 electrode sensor, 20 ft cable, conductivity node (2255, 2855, and NexSys® only)	$897	W
1235438	SR2NHD, 2 electrode harsh duty sensor, 20 ft cable, conductivity node (2255, 2855, and NexSys® only)	$1,151	W
1168375	SR4, 4 electrode sensor with 20 ft cable	$994	W
1169994	SR4N, 4 electrode sensor, 20 ft cable, conductivity node (2255, 2855, and NexSys® only)	$1,757	W
1167162	2 electrode boiler sensor replacement	$332	W
1229841	2 electrode harsh duty boiler sensor replacement	$555	W
1168074	4 electrode sensor (543M-STD)	$687	R
1167295	PL5, ½ sample/cycle plumbing	$217	W
1168601	PL575, ¾ sample/cycle plumbing	$237	W
1167297	PL6, ½ continuous plumbing	$476	W
1167296	PL675, ¾ continuous plumbing	$496	W
1233981	PLKT Plumbing kit. ½" sample/cycle and continuous sample kit. Includes unions, orifice plates, cross, tee, and manual block valve only. Does not include piping.	$552	W
1167520	GV, Globe valve with position indicator	$490	R
1269395	GVN, Globe valve without position indicator	$296	R
1167244	Orifice Union ½ inch NPT	$86	R
1166355	Orifice plate, ½ inch NPT, 1/16	$39	R
1166356	Orifice plate, ½ inch NPT, 1/4	$39	R
1166354	Orifice plate, ½ inch NPT, 1/8	$39	R
1167972	Orifice plate, ½ inch NPT, 3/8	$39	R
1167245	Orifice Union ¾ inch NPT	$96	R
1168998	Orifice plate, ¾ inch NPT, 1/16	$39	R
1169000	Orifice plate, ¾ inch NPT, 1/4	$39	R
1168999	Orifice plate, ¾ inch NPT, 1/8	$39	R
1169001	Orifice plate, ¾ inch NPT, 3/8	$39	R
1268608	MBV1, ½ inch motorized ball valve	$746	R
1268614	MBV2, ¾ inch motorized ball valve	$773	R
1269179	Replacement Ball Valve ½ inch for MBV1	$267	W
1269180	Replacement Ball Valve ¾ inch for MBV2	$339	W
1269181	Replacement Actuator for MBV1 and MBV2	$725	R
1107251	PS (+24VDC supply required for 3 or more nodes)	$38	R

Copyright 2017 © Lakewood Instruments, LLC.
Printed in the USA, Rev A.4

PROCESS CONTROLLERS

Copyright 2017 © Lakewood Instruments, LLC.
Printed in the USA, Rev A.4

LAKEWOOD INSTRUMENTS MODEL 1520/30e pH or ORP WATER TREATMENT CONTROLLER

The Model 1520/30e uses the latest in microprocessor capability, giving the user a high level of application flexibility in pH or ORP control. The user in the field can configure this controller to operate as a pH or an ORP controller. A large illuminated graphics screen, multiple inputs, and very easy setup characterize this new technology. Water meters, sensors and plumbing assemblies are purchased separately.

PART NUMBER 1240475 SHOWN
Water Treatment Controller, Controller Only.

FEATURES

- Removable power cord and receptacles for simple conduit installations.
- Scheduled feed, which can use three relays for biocides or other chemicals.
- Two (2) water meter inputs, two (2) drum switch inputs, pH or ORP input, flow switch input, and 4-20 mA output are all standard features.
- Designed with a single circuit board for better reliability and lower cost.
- Large open shallow enclosure for easy wiring.
- Heavy-duty stainless steel domed numeric keypad and illuminated graphical display allow for quick and easy programming. Steel domed switches improve the tactile sensing and life expectancy of the keypad.
- LED indicators for power, alarm and relay status.

BENEFITS

- Easy to program with the Lakewood plain English, intuitive, and user friendly menu interface.
- Controller can be removed from a cooling tower and be placed in another type of application when used with the appropriate pH or ORP sensor.
- Single circuit board design improves reliability.
- No add-on options. 4-20 mA output and biocide features are standard.

SPECIFICATIONS

pH range	2-12 pH
ORP range	-1000 to +1000 mV
Sensor Types	Solution ground, Signal differential, or Single-Ended
Resolution	±.10 pH or 1mV
Accuracy & repeatability	± 1.0%
Deadband/Setpoint	Adjustable
Auto/Manual outputs	Menu selectable
Keypad	16 tactile push-buttons
Display	Illuminated 128x64 pixel LCD
Drum Switch Inputs	2 digital contact inputs
Water meter inputs (2)	Contact head, paddle wheel or turbine

Timer	Relay run time exceeded
Output Signal	One 4 – 20 mA, non-isolated isolated powered output
Output relays	4 selectable use
Relay ratings	3A each, 10A total
Power	120/240 VAC 50/60 Hz
Ambient	30˚ - 120˚F (0-49˚C)
Enclosure	NEMA 4X, ETL

Sensors/Plumning	Process/Wastewater
Max Pressure	70 psi (4.8 bar)
Max Temp	230°F (110°C)
Min Flow	1 gpm (3.785 Lpm)

Copyright 2017 © Lakewood Instruments, LLC.
Printed in the USA, Rev A.4

PH AND ORP SENSORS

The 1520/30e uses the Lakewood Instruments model 520 series pH sensor for process pH applications and the model 530 series ORP sensor for process ORP applications. With two different body materials and three mounting options, Lakewood Instruments can supply pH or ORP sensors to fit your needs.

The 1520e Uses the Lakewood Instruments
520 Series Sensors
For pH
Part Number 1167302 pH
Replacement Sensor Tip Shown

The 1530e Uses the Lakewood Instruments
530 Series Sensors
For ORP
Part Number 1167318 ORP
Replacement Sensor Tip Shown

PART NO.	pH/ORP PROCESS CONTROLLER	LIST	CD
1240475	1520/30e controller only, no sensor	$1,225	W

SEE THE 520 SERIES FOR PROCESS pH SENSORS AND THE 530 SERIES FOR PROCESS ORP SENSORS.

Copyright 2017 © Lakewood Instruments, LLC.
Printed in the USA, Rev A.4

PROCESS SENSORS

Copyright 2017 © Lakewood Instruments, LLC.
Printed in the USA, Rev A.4

Model 520-4-7R-18-STD shown

Lakewood Instruments Model 520 Series pH Sensors

Lakewood Instruments uses the latest technology in pH electrode construction. Lakewood's differential electrode design prevents ground loop problems and excessive dependence on the reference electrode connection to the process stream for stable readings. With two different body materials, three mounting options, four different glass electrodes, and two different electrical connectors, Lakewood Instruments can supply pH sensors to fit your needs. The model 520 sensors include a BNC electrical connector. The model 522 sensors include a SMB electrical connector for node connections.

Specifications

Option	Body Material	Max Temp.†	Pressure*	Wetted Materials
-5x	CPVC	150°F (66°C)†	100 psi (6.9 bar)*	CPVC, Glass, Carbon, Viton
-7x	316 SS	230°F (110°C)†	150 psi (10.3 bar)*	316 SS, Glass, Viton

-STD is the STANDARD glass bulb type electrode for use in systems with low fouling potential and minimal abrasives. pH range is 0-12, Max Temperature† is 230°F (110°C)†
For replacement tips specify electrode type and total length in inches

-PW is the HIGH PURITY glass bulb type electrode for use in systems with low conductivity. pH range is 0-12, Max Temperature† is 212°F (100°C)†
For replacement tips specify electrode type and total length in inches

-HS is the HIGH SODIUM glass bulb type electrode for use in systems with a high pH and high concentration of sodium ions. This sensor compensates for sodium ion errors. pH range is 0-14, Max Temperature† is 212°F (100°C)†
For replacement tips specify electrode type and total length in inches

-DG is the extra strength DOME glass bulb type electrode for use in systems with slightly fouling or slightly abrasive water. pH range is 0-12, Max Temperature† is 212°F (100°C)†
For replacement tips specify electrode type and total length in inches

TEMPERATURE COMPENSATOR: 10K PTC

† Temperature rating of sensors depends on the combination of the body and glass electrode. Use the lower temperature of the sensor's body or glass electrode to determine sensors temperature specification.
* The maximum pressure rating for the 5I, 5R, 7I and 7R options with the Teflon ferrules is 70 psi.

Copyright 2017 © Lakewood Instruments, LLC.
Printed in the USA, Rev A.4

5205 Replacement Tip CPVC

5207 Replacement Tip 316 SS

Note the different electrical connections!

5225 Replacement Tip CPVC

5227 Replacement Tip 316 SS

INLINE MOUNTING OPTIONS

- **5I** 1 1/2 Inch NPT CPVC Compression

- **7I** 3/4 Inch NPT 316 SS Swagelock

- **5R** 1 1/2 Inch NPT CPVC Ball Valve

- **7R** 1 Inch NPT 316 SS Ball valve

Copyright 2017 © Lakewood Instruments, LLC.
Printed in the USA, Rev A.4

ORDERING INFORMATION

PICK ONE FROM EACH SECTION

pH Sensor

520
522

Cable Length or Enclosure

-4 180 inch of cable
-5 NEMA-4X enclosure
-6 Custom cable length
Maximum of 15 ft.

Material, Inline Fitting

-5S CPVC no fitting
-5I CPVC w/compress fitting 11/2 inch NPT
-5R CPVC w/ball valve 11/2 inch NPT
-7S 316 SS no fitting
-7I 316 SS w/Swagelock fitting 3/4 inch NPT
-7R 316 SS w/ball valve 1inch NPT

Body Length

-10 inch†
-18 inch
-48 inch

Electrode Type

-STD
-DG
-HS
-PW

EXAMPLE

520
-4
-5R
-18
-STD

†10 inch body not available with -5R or -7R **Option.**

Copyright 2017 © Lakewood Instruments, LLC.
Printed in the USA, Rev A.4

MODEL 520 SERIES

PART NO.	DESCRIPTION	LIST	CD
1169666	520-4-5I-18-DG	$676	R
1167986	520-4-5I-18-STD	$559	R
1105051	520-4-5I-10-STD	$530	R
1167988	520-4-5R-18-STD	$682	R
1109615	520-4-5S-18-STD	$459	R
1269483	520-4-5S-18-DG	$578	R
1167989	520-4-5S-48-STD	$523	R
1105052	520-4-5S-10-STD	$430	R
1268974	520-4-5S-10-HS	$538	R
1228083	520-4-7I-10-HS	$631	R
1165305	520-4-7I-10-STD	$525	R
1269219	520-4-7I-10-DG	$631	R
1269601	520-4-7I-10-PW	$524	R
1167984	520-4-7I-18-STD	$558	R
1269270	520-4-7I-18-DG	$679	R
1240143	520-4-7I-48-STD	$625	R
1167983	520-4-7R-18-STD	$690	R
1269102	520-4-7R-18-DG	$797	R
1269171	520-4-7S-18-STD	$483	R
1109944	520-4-7S-48-DG	$658	R
1167982	520-4-7S-48-STD	$551	R
1169876	520-4-7S-10-STD	$450	R
1168586	520-5-5I-18-STD	$655	R
1105054	520-5-5I-10-STD	$626	R
1168587	520-5-5R-18-STD	$787	R
1104404	520-5-5S-18-STD	$555	R
1168588	520-5-5S-48-STD	$619	R
1269297	520-5-5S-48-HS	$742	R
1105055	520-5-5S-10-STD	$526	R
1268639	520-5-5S-10-HS	$633	R
1168592	520-5-7I-18-STD	$654	R
1105056	520-5-7I-10-STD	$620	R
1168593	520-5-7R-18-STD	$785	R
1168594	520-5-7S-48-STD	$647	R
1105057	520-5-7S-10-STD	$546	R
1239903	520-6-5I-18-STD	$598	R
1169704	520-6-5S-48-HS	$669	R
1167125	520-6-5S-48-STD	$562	R
1167126	520-6-5S-18-STD	$498	R
1169646	520-6-7R-18-STD	$728	R
1167129	520-6-7S-48-STD	$590	R
1167130	520-6-7S-18-STD	$522	R

Copyright 2017 © Lakewood Instruments, LLC.
Printed in the USA, Rev A.4

MODEL 520 SERIES

PART NO.	REPLACEMENT PARTS	LIST	CD
	MODEL 520		
1169452	Sensor Tip 5205-DG with BNC Connector (specify length when ordering)	$470	R
1169453	Sensor Tip 5205-HS with BNC Connector (specify length when ordering)	$470	R
1167302	Sensor Tip 5205-STD with BNC Connector (specify length when ordering)	$362	R
1269639	Sensor Tip 5205-PW with BNC Connector (specify length when ordering)	$362	R
1169460	Sensor Tip 5207-DG with BNC Connector (specify length when ordering)	$470	R
1169462	Sensor Tip 5207-HS with BNC Connector (specify length when ordering)	$470	R
1167304	Sensor Tip 5207-STD with BNC Connector (specify length when ordering)	$362	R
1269602	Sensor Tip 5207-PW with BNC Connector (specify length when ordering)	$362	R
	MODEL 522		
1269580	Sensor Tip 5225-DG with SMB Connector (specify length when ordering)	$470	R
1269581	Sensor Tip 5225-HS with SMB Connector (specify length when ordering)	$470	R
1269582	Sensor Tip 5225-STD with SMB Connector (specify length when ordering)	$362	R
1269640	Sensor Tip 5225-PW with SMB Connector (specify length when ordering)	$362	R
1269583	Sensor Tip 5227-DG with SMB Connector (specify length when ordering)	$470	R
1269584	Sensor Tip 5227-HS with SMB Connector (specify length when ordering)	$470	R
1269585	Sensor Tip 5227-STD with SMB Connector (specify length when ordering)	$362	R
1269642	Sensor Tip 5227-PW with SMB Connector (specify length when ordering)	$362	R
1167261	Fitting, 5I	$110	R
1167090	Fitting, 5R	$243	R
1167374	Fitting, 7I	$85	R
1167375	Fitting, 7R	$216	R
1167124	Preamp, pH/ORP	$434	R
1166317	Cable, 4 conductor /ft, 20 ft minimum order (price per foot)	$1	R
1169780	Cable, pH, BNC / 4Conductor, 5ft	$108	R
1169781	Cable, pH, BNC / 4Conductor, 10ft	$108	R

Copyright 2017 © Lakewood Instruments, LLC.
Printed in the USA, Rev A.4

Model 530-4-7I-10 shown

Lakewood Instruments 530 Series ORP Sensors

Lakewood Instruments uses the latest technology in ORP electrode construction. Lakewood's differential electrode design prevents ground loop problems and excessive dependence on the reference electrode connection to the process stream for stable readings. With two different body materials and three mounting options, Lakewood Instruments can supply ORP sensors to fit your needs.

Specifications

Option	Body Material	Max Temp.†	Pressure*	Wetted Materials
-5x	CPVC	150°F (66°C)†	100 psi (6.9 bar)*	CPVC, Glass, Carbon, Viton
-7x	316 SS	230°F (110°C)†	150 psi (10.3 bar)*	316 SS, Glass, Viton

Close up of the stainless steel sensor tip shown

Range on ORP sensors is -1000 to +1000 mV

For replacement tips specify total length in inches

***The maximum pressure rating for the 5I, 5R, 7I and 7R options with the teflon ferrules is 70 psi.**

Copyright 2017 © Lakewood Instruments, LLC.
Printed in the USA, Rev A.4

5305 Replacement Tip CPVC

5307 Replacement Tip 316 SS

Note the different electrical connections!

5325 Replacement Tip CPVC

5327 Replacement Tip 316 SS

INLINE MOUNTING OPTIONS

- **5I** 1 1/2 Inch NPT CPVC Compression

- **7I** 3/4 Inch NPT 316 SS Swagelock

- **5R** 1 1/2 Inch NPT CPVC Ball Valve

- **7R** 1 Inch NPT 316 SS Ball valve

Copyright 2017 © Lakewood Instruments, LLC.
Printed in the USA, Rev A.4

ORDERING INFORMATION

PICK ONE FROM EACH SECTION

ORP Sensor

530
532

Cable Length or Enclosure

-4 180 inch of cable
-5 NEMA-4X enclosure
-6 custom cable length
Maximum of 15 ft.

Material, Inline Fitting

-5S CPVC no fitting
-5I CPVC w/compress fitting 11/2 inch NPT
-5R CPVC w/ball valve 11/2 inch NPT
-7S 316 SS no fitting
-7I 316 SS w/Swagelock fitting 3/4 inch NPT
-7R 316 SS w/ball valve 1 inch NPT

Body Length

-10 inch†
-18 inch
-48 inch

EXAMPLE

530
-4
-5R
-18

†10 inch body not available with -5R or -7R **Option.**

Copyright 2017 © Lakewood Instruments, LLC.
Printed in the USA, Rev A.4

MODEL 530 SERIES

PART NO.	DESCRIPTION	LIST	CD
1169194	530-4-5I-18	$647	R
1169668	530-4-5I-10	$618	R
1169265	530-4-5R-18	$779	R
1169266	530-4-5S-48	$611	R
1169664	530-4-5S-10	$518	R
1169268	530-4-7I-18	$646	R
1169889	530-4-7I-10	$612	R
1169269	530-4-7R-18	$777	R
1169270	530-4-7S-48	$639	R
1105075	530-4-7S-10	$538	R
1169271	530-5-5I-18	$743	R
1105076	530-5-5I-10	$714	R
1169272	530-5-5R-18	$875	R
1169273	530-5-5S-48	$707	R
1105077	530-5-5S-10	$614	R
1169275	530-5-7I-18	$742	R
1105078	530-5-7I-10	$708	R
1169276	530-5-7R-18	$873	R
1105079	530-5-7S-10	$633	R
1167144	530-6-5S-48	$650	R
1167145	530-6-5S-18	$585	R
1167148	530-6-7S-48	$677	R
1167149	530-6-7S-18	$610	R

PART NO.	REPLACEMENT PARTS		
	MODEL 530		
1167318	Sensor Tip 5305 with BNC Connector (specify length when ordering)	$450	R
1106786	Sensor Tip 5307 with BNC Connector (specify length when ordering)	$450	R
	MODEL 532		
1269586	Sensor Tip 5325 With SMB Connector (specify length when ordering)	$450	R
1269587	Sensor Tip 5327 With SMB Connector (specify length when ordering)	$450	R
1167261	Fitting, 5I	$110	R
1167090	Fitting, 5R	$243	R
1167374	Fitting, 7I	$85	R
1167375	Fitting, 7R	$216	R
1167124	Preamp, pH/ORP	$434	R
1166317	Cable, 4 conductor /ft, 20 ft minimum order (price per foot)	$1	R
1169780	Cable, pH, BNC / 4Conductor, 5ft	$108	R
1169781	Cable, pH, BNC / 4Conductor, 10ft	$108	R

Copyright 2017 © Lakewood Instruments, LLC.
Printed in the USA, Rev A.4

LAKEWOOD INSTRUMENTS SERIES 540 2-ELECTRODE CONDUCTIVITY SENSORS

540K.1 SENSOR TIP

540K.01 SENSOR TIP WITH SS BODY

The Model 540 Conductivity Sensor offers a reliable and easy-to-use tool for measuring high- purity water or condensate return. Available configured as in-line, retractable or submersible, the Model 540 provides accurate input for monitoring or control of total dissolved solids in the 1 to 10 µS or 10 to 100 µS conductivity ranges. These sturdy sensors can withstand temperatures up to 392°F (200°C) and will serve for a long period of time.

BENEFITS

- Reliable control
- Labor-saving
- Economical
- Long life
- Accurate

SPECIFICATIONS

Length(s) body	10 inch or 18 inch
Diameter, OD	3⁄4 inch
Material	316 SS
T emp. ranges	0-392°F (200°C)
Temp. comp.	500 NTC
Cell constants	0.01 or 0.1
Cable lengths	20 ft max.
Cable insulation	TFE
Pressure Trend Swagelock	70 psi (4.8 bar)
Insulator mat.	PVDF
Range K.1	10-100 µS
Range K.01	1-10 µS

Copyright 2017 © Lakewood Instruments, LLC.
Printed in the USA, Rev A.4

Model 540K.1-4-10R-18-TC500 shown

INLINE MOUNTING OPTIONS

- **10I** 3/4 inch NPT 316 SS Swagelock

- **10R** 3/4 inch NPT 316 SS Swagelock

Copyright 2017 © Lakewood Instruments, LLC.
Printed in the USA, Rev A.4

ORDERING INFORMATION

PICK ONE FROM EACH SECTION

Sensor

540K.1
540K.01

Cable Length or Enclosure

- **4** 240 inch of cable
- **5** NEMA 4X enclosure

Material, Inline Fitting

- **10S** 316 SS no fitting
- **10I** 316 SS w/Swagelock fitting 3⁄4 inch NPT
- **10R** 316 SS w/ball valve 1 inch NPT

Body Length

-10 inch†
-18 inch

Temp Comp

- **TC500**

EXAMPLE

540K.1
-4
-10R
-18
-TC500

†10 inch body not available with **-10R Option.**

Copyright 2017 © Lakewood Instruments, LLC.
Printed in the USA, Rev A.4

MODEL 540K.1 SERIES

PART NO.	DESCRIPTION	LIST	CD
1104591	540K.1-4-10I-10-TC500	$588	R
1169602	540K.1-4-10I-18-TC500	$621	R
1168617	540K.1-4-10R-18-TC500	$753	R
1105096	540K.1-4-10S-10-TC500	$513	R
1167087	540K.1-4-10S-18-TC500	$547	R

REPLACEMENT PARTS

PART NO.	DESCRIPTION	LIST	CD
1169054	Sensor Tip 540K.1-TC500	$426	R
1167374	Fitting, 10I	$85	R
1167375	Fitting, 10R	$216	R
1166317	Cable, 4 conductor /ft, 20 ft minimum order (price per foot)	$1	R
1167230	Preamp, Conductivity	$434	R

MODEL 540K.01 SERIES

PART NO.	DESCRIPTION	LIST	CD
1104592	540K.01-4-10I-10-TC500	$1,088	R
1167084	540K.01-4-10I-18-TC500	$1,121	R
1169642	540K.01-4-10R-18-TC500	$1,253	R

REPLACEMENT PARTS

PART NO.	DESCRIPTION	LIST	CD
1169054	Sensor Tip 540K.01-TC500	$925	R
1167374	Fitting, 10I	$85	R
1167375	Fitting, 10R	$216	R
1166317	Cable, 4 conductor /ft, 20 ft minimum order (price per foot)	$1	R
1167230	Preamp, Conductivity	$434	R

Copyright 2017 © Lakewood Instruments, LLC.
Printed in the USA, Rev A.4

543 SERIES 4-ELECTRODE CONDUCTIVITY SENSORS

543-M REPLACEMENT TIP

543-LL REPLACEMENT TIP

543-L REPLACEMENT TIP

Copyright 2017 © Lakewood Instruments, LLC.
Printed in the USA, Rev A.4

ELECTRODE SPECIFICATIONS

Electrode	Conductivity Range	Temp Compensator	Max Temp	Max Pressure*
543-M	500-100,000 µS	4K NTC	392°F (200°C)	250 psi (17.2 bar)
543-L	100-1,000 µS	4K NTC	392°F (200°C)	250 psi (17.2 bar)
543-LL	10-500 µS	1K PTC	392°F (200°C)	250 psi (17.2 bar)

BODY SPECIFICATIONS

Option	Body Material	Max Temp	Pressure*	Wetted Materials
-5x	CPVC	150°F (66°C)	100 psi (6.9 bar)	CPVC, 316 SS, PEEK, Titanium, Viton
-8x	316 SS	260°F (127°C)	150 psi (10.3 bar)	316 SS, PEEK, Titanium, Viton

Copyright 2017 © Lakewood Instruments, LLC.
Printed in the USA, Rev A.4

Model 543L-4-8R-18 shown

INLINE MOUNTING OPTIONS
(All sensors have 3⁄4 inch NPT on sensor tip)

-8I 1 inch NPT316 SS Swagelock

-8R 1 ½ inch NPT 316 SS Ball valve

Copyright 2017 © Lakewood Instruments, LLC.
Printed in the USA, Rev A.4

ORDERING INFORMATION

PICK ONE FROM EACH SECTION

Sensor

543-M
543-L
543-LL

Cable Length or Enclosure

- **4** 240 inch of cable
- **5** NEMA 4X enclosure

Material, Inline Fitting

- **5S** CPVC no fitting
- **8S** 316 SS no fitting
- **8I** 316 SS w/Swagelock fitting 1 inch NPT
- **8R** 316 SS w/ball valve 11⁄2 inch NPT

Body Length

-10 inch†
-18 inch
- 48 inch

EXAMPLE

543-M
-4
-8R
-18

†10 inch body is not available with -8R Option.

Copyright 2017 © Lakewood Instruments, LLC.
Printed in the USA, Rev A.4

MODEL 543 M SERIES

PART NO.	DESCRIPTION	LIST	CD
1166602	Sensor Tip 543-M-4-5S-10	$766	R
1105230	Sensor Tip 543-M-4-5S-18	$796	R
1169101	Sensor Tip 543-M-4-5S-48	$860	R
1104578	Sensor Tip 543-M-4-8I-10	$878	R
1168103	Sensor Tip 543-M-4-8I-18	$925	R
1169104	Sensor Tip 543-M-4-8R-18	$1,252	R
1105233	Sensor Tip 543-M-4-8S-10	$781	R
1105234	Sensor Tip 543-M-4-8S-18	$828	R
1169103	Sensor Tip 543-M-4-8S-48	$901	R
1109802	Sensor Tip 543-M-5-8I-18	$1,021	R
1105236	Sensor Tip 543-M-5-5S-10	$862	R
1105237	Sensor Tip 543-M-5-5S-18	$891	R
1105238	Sensor Tip 543-M-5-5S-48	$956	R
1105242	Sensor Tip 543-M-5-8I-10	$974	R
1105243	Sensor Tip 543-M-5-8R-18	$1,347	R
1105244	Sensor Tip 543-M-5-8S-10	$877	R
1105245	Sensor Tip 543-M-5-8S-18	$924	R
1105246	Sensor Tip 543-M-5-8S-48	$997	R

PART NO.	REPLACEMENT PARTS		
1168074	Sensor Tip 543M-STD	$687	R
1169168	Fitting, 8I	$107	R
1169058	Fitting, 8R	$434	R
1168893	Adapter, 543 to 3/4 NPT	$33	R
1166317	Cable, 4 conductor /ft, 20 ft minimum order (price per foot)	$1	R
1167230	Preamp, Conductivity	$434	R

Copyright 2017 © Lakewood Instruments, LLC.
Printed in the USA, Rev A.4

MODEL 543 L SERIES

PART NO.	DESCRIPTION	LIST	CD
1105161	543-L-4-5S-10	$766	R
1105162	543-L-4-5S-18	$796	R
1169120	543-L-4-5S-48	$860	R
1105165	543-L-4-8I-10	$878	R
1169123	543-L-4-8I-18	$925	R
1169124	543-L-4-8R-18	$1,252	R
1105166	543-L-4-8S-10	$781	R
1105167	543-L-4-8S-18	$828	R
1169122	543-L-4-8S-48	$901	R
1105169	543-L-5-5S-10	$862	R
1105170	543-L-5-5S-18	$891	R
1105171	543-L-5-5S-48	$956	R
1104430	543-L-5-8I-18	$1,021	R
1105168	543-L-5-8I-10	$974	R
1109654	543-L-5-8R-18	$1,347	R
1105175	543-L-5-8S-10	$877	R
1104859	543-L-5-8S-18	$924	R
1105176	543-L-5-8S-48	$997	R

PART NO.	REPLACEMENT PARTS		
1168075	Sensor Tip 543L-STD	$686	R
1169168	Fitting, 8I	$107	R
1169058	Fitting, 8R	$434	R
1168893	Adapter, 543 to 3/4 NPT	$33	R
1166317	Cable, 4 conductor /ft, 20 ft minimum order (price per foot)	$1	R
1167230	Preamp, Conductivity	$434	R

Copyright 2017 © Lakewood Instruments, LLC.
Printed in the USA, Rev A.4

MODEL 543 LL SERIES

PART NO.	DESCRIPTION	LIST	CD
1105195	543-LL-4-5S-10	$792	R
1105196	543-LL-4-5S-18	$821	R
1169130	543-LL-4-5S-48	$885	R
1105199	543-LL-4-8I-10	$904	R
1169133	543-LL-4-8I-18	$951	R
1169134	543-LL-4-8R-18	$1,277	R
1105200	543-LL-4-8S-10	$807	R
1105201	543-LL-4-8S-18	$854	R
1169132	543-LL-4-8S-48	$926	R
1105203	543-LL-5-8R-18	$1,373	R
1105204	543-LL-5-5S-10	$887	R
1105205	543-LL-5-5S-18	$917	R
1105206	543-LL-5-5S-48	$981	R
1105210	543-LL-5-8I-10	$1,000	R
1105211	543-L-5-8I-18	$1,047	R
1105212	543-LL-5-8S-10	$903	R
1105213	543-LL-5-8S-18	$950	R
1105214	543-LL-5-8S-48	$1,022	R

PART NO.	REPLACEMENT PARTS		
1168076	Sensor Tip 543LL-STD	$712	R
1169168	Fitting, 8I	$107	R
1169058	Fitting, 8R	$434	R
1168893	Adapter, 543 to 3/4 NPT	$33	R
1166317	Cable, 4 conductor /ft, 20 ft minimum order (price per foot)	$1	R
1167230	Preamp, Conductivity	$434	R

Copyright 2017 © Lakewood Instruments, LLC.
Printed in the USA, Rev A.4

PULSAtron® AND CHEM-TECH METERING PUMPS

Copyright 2017 © Lakewood Instruments, LLC.
Printed in the USA, Rev A.4

PLACING AN ORDER

Orders may be placed with our Customer Service Department (CSD) by fax, e-mail, or mail. A Purchase Order (PO) or Visa, MasterCard, or Discover may be used to purchase items. To use a PO an established account is required and the PO must be on company letterhead. To establish an account, you will need to fill out a credit application. Payment terms with accounts are net 30 days. Contact us for more details.

Contact us at:
1-800-228-0839
(414) 355-3508 fax
order@lakewoodinstruments.com

Visit our website www.lakewoodinstruments.com to download manuals, cut sheets, and the pricelist/catalog in .PDF format and to download the latest versions of communications interface software.

CANCELELLATIONS AND RETURNS

Order cancellations will not be accepted for items requiring special engineering, custom assembly, or special buy-out parts after order acceptance. Orders for special order pH sensors requiring other than standard glass cannot be canceled after receipt of order because of loss of product due to storage life limitations.

Standard products can be returned for re-stocking subject to a 20% re-stocking charge. All returned goods must be less than one year old in good condition, and unused. Acceptance of return is subject to inspection and final acceptance by the Quality Control Department. Customs and specials will not be accepted for return.

All Prices are shown as List price.

Lakewood Instruments, LLC will only honor pricing shown in this supplement.

Standard distributor or Pulsafeeder pricing and discounts do not apply and will not be honored.

For Reseller purposes, all products in the supplement are coded a "F". Please call Lakewood Instruments to receive the appropriate multipliers

Copyright 2017 © Lakewood Instruments, LLC.
Printed in the USA, Rev A.4

PULSAFEEDER®

METERING PUMPS AND CONROL SYSTEMS

Effective 01/03/2017

Price List

PULSAFEEDER®

The Pulsatron Series A Plus offers manual function controls over stroke length and stroke rate as standard with the option to select external pace for automatic control.

Ten distinct models are available, having pressure capabilities to 250 PSIG (17 BAR) @ 12 GPD (1.9 lph), and flow capacities to 58 GPD (9.1 lph) @ 100 PSIG (7.0 BAR), with a standard turndown ratio of 100:1, and optional ratio of 1000:1. Metering performance is reproducible to within ± 3% of maximum capacity.

Features

- Manual Control by on-line adjustable stroke rate and stroke length.
- Highly Reliable timing circuit.
- Circuit Protection against voltage and current upsets.
- Solenoid Protection by thermal overload with auto-reset.
- Water Resistant, for outdoor and indoor applications.
- Internally Dampened To Reduce Noise.
- Guided Ball Check Valve Systems, to reduce back flow and enhance outstanding priming characteristics.
- Few Moving Parts and Wall Mountable.
- Safe & Easy Priming with durable leak-free bleed valve assembly (standard).
- Optional Control: External pace with auto/manual selection.

Controls

Manual Stroke Rate

Manual Stroke Length

External Pacing - Optional

External Pace With Stop - Optional (125 SPM only)

Controls Options		
Feature	Standard Configuration	Optional Configuration [1]
External Pacing	---	Auto / Manual Selection [2]
External Pace w/ Stop (125 SPM only)	---	Auto / Manual Selection [2]
Manual Stroke Rate	10:1 Ratio	100:1 Ratio
Manual Stroke Length	10:1 Ratio	10:1 Ratio
Total Turndown Ratio	100:1 Ratio	1000:1 Ratio

Note 1: On S2, S3 & S4 sizes only.

Note 2: Not available on 1000:1 turndown pumps.

Operating Benefits

- Reliable metering performance.
- Rated “hot” for continuous duty.
- High viscosity capability.
- Leak-free, sealless, liquid end.

Aftermarket

- KOPkits
- Gauges
- Dampeners
- Pressure Relief Valves

PULSAtron® Series A Plus Electronic Metering Pumps

PULSAtron® Series A Plus

Specifications and Model Selection

MODEL			LBC2	LB02	LBC3	LB03	LB04	LB64	LBC4	LBS2	LBS3	LBS4
Capacity nominal (max.)		GPH	0.25	0.25	0.42	0.50	1.00	1.25	2.00	0.50	1.38	2.42
		GPD	6	6	10	12	24	30	48	12	33	58
		LPH	0.9	0.9	1.6	1.9	3.8	4.7	7.6	1.9	5.2	9.14
Pressure[3] (max.)	GFPP, PVDF, 316SS or PVC (W code) w/TFE Seats)	PSIG (Bar)	250 (17)	150 (10)	250 (17)	150 (10)	100 (7)	100 (7)	50 (3.3)	250 (17)	150 (10)	100 (7)
	PVC (V code) Viton or CSPE Seats / Degas Liquid End		150 (10)							150 (10)		
Connections:		Tubing	1/4" ID X 3/8" OD						3/8" ID X 1/2" OD	1/4" ID X 3/8" OD		
		Piping	1/4" FNPT									
Strokes/Minute		SPM	125							250		

Note 3: Pumps with rated pressure above 150 PSI will be de-rated to 150 PSI Max. when selecting certain valve options, see Price Book for details.

Engineering Data

Pump Head Materials Available: GFPPL, PVC, PVDF, 316 SS

Diaphragm: PTFE-faced CSPE-backed

Check Valves Materials Available:

Seats/O-Rings: PTFE, CSPE, Viton

Balls: Ceramic, PTFE, 316 SS, Alloy C

Fittings Materials Available: GFPPL, PVC, PVDF

Bleed Valve: Same as fitting and check valve selected, except 316SS

Injection Valve & Foot Valve Assy: Same as fitting and check valve selected

Tubing: Clear PVC, White PE

Important: Material Code - GFPPL=Glass-filled Polypropylene, PVC=Polyvinyl Chloride, PE=Polyethylene, PVDF=Polyvinylidene Fluoride, CSPE=Generic formulation of Hypalon, a registered trademark of E.I. DuPont Company. Viton is a registered trademark of E.I. DuPont Company. PVC wetted end recommended for sodium hypochlorite.

Engineering Data

Reproducibility:	+/- 3% at maximum capacity
Viscosity Max CPS:	1000 CPS
Stroke Frequency Max SPM:	125 / 250 by Model
Stroke Frequency Turn-Down Ratio:	10:1 /100:1 by Model
Stroke Length Turn-Down Ratio:	10:1
Power Input:	115 VAC/50-60 HZ/1 ph 230 VAC/50-60 HZ/1 ph
Average Current Draw:	
@ 115 VAC; Amps:	0.6 Amps
@ 230 VAC; Amps:	0.3 Amps
Peak Input Power:	130 Watts
Average Input Power @ Max SPM:	50 Watts

Dimensions

Series A PLUS Dimensions (inches)						
Model No.	A	B	C	D	E	Shipping Weight
LB02 / S2	5.0	9.6	9.5	6.5	8.2	10
LBC2	5.0	9.9	9.5	6.5	8.5	10
LBC3	5.0	9.9	9.5	6.5	8.5	10
LB03 / S3	5.0	9.9	9.5	6.5	8.5	10
LB04 /S4	5.0	9.9	9.5	6.5	8.5	10
LB64	5.0	9.9	9.5	6.5	8.5	10
LBC4	5.0	9.9	9.5	6.5	8.5	10

NOTE: Inches X 2.54 = cm

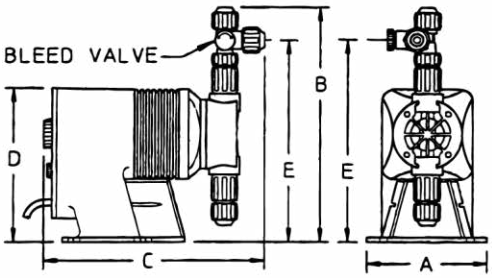

PULSAFEEDER®
An IDEX Water & Wastewater Business IDEX

pulsafeeder.com

The Pulsatron Series C offers manual online stroke length adjustment with fixed stroke rate. Optional control features include external pace a choice between momentary on/off switch for priming the pump or a toggle on/off switch for manual override of all control functions.

Four distinct models are available, having pressure capabilities of 80 PSIG (5.6 BAR), and flow capacities up to 30 GPD (4.7 lph), with a turndown ratio of 10:1. Metering performance is reproducible to within ± 3% of maximum capacity.

Features

- Manual Control by on-line adjustable stroke length (fixed stroke rate).
- Liquid Low Level Option available to prevent loss of prime.
- Highly Reliable timing circuit.
- Circuit Protection against voltage and current upsets.
- Solenoid Protection by thermal overload with auto-reset.
- Water Resistant, for outdoor and indoor applications.
- Internally Dampened To Reduce Noise.
- Guided Ball Check Valve Systems, to reduce back flow and enhance outstanding priming characteristics.
- Few Moving Parts and Wall Mountable.
- Safe & Easy Priming with durable leak-free bleed valve assembly (standard).
- Automatic Control by external pacing with prime switch (optional).

Controls

Manual Stroke Length

- Turn-Down Ratio 5:1

External Pacing-Optional

- Auto/Manual Selection or Prime Button

Operating Benefits

- Reliable metering performance.
- Rated “hot” for continuous duty.
- High viscosity capability.
- Leak-free, sealless, liquid end.

Aftermarket

- KOPkits
- Gauges
- Dampeners
- Pressure Relief Valves

PULSAtron® Series C Electronic Metering Pumps

PULSAtron® Series C

Specifications and Model Selection

MODEL		LC02	LC03	LC04	LC54
Capacity	GPH	0.25	0.50	1.00	1.25
nominal	GPD	6	12	24	30
(max.)	LPH	0.9	1.9	3.8	4.7
Pressure	PSIG	80	80	80	80
(max.)	BAR	5.6	5.6	5.6	5.6
Connections:	Tubing	1/4" ID X 3/8" OD 3/8" ID X 1/2" OD			
	Piping	1/4" FNPT			

Engineering Data

Pump Head Materials Available: GFPPL, PVC, PVDF, 316 SS

Diaphragm: PTFE-faced CSPE-backed

Check Valves Materials Available:

Seats/O-Rings: PTFE, CSPE, Viton

Balls: Ceramic, PTFE, 316 SS, Alloy C

Fittings Materials Available: GFPPL, PVC, PVDF

Bleed Valve: Same as fitting and check valve selected, except 316SS

Injection Valve & Foot Valve Assy: Same as fitting and check valve selected

Tubing: Clear PVC, White PE

Important: Material Code - GFPPL=Glass-filled Polypropylene, PVC=Polyvinyl Chloride, PE=Polyethylene, PVDF=Polyvinylidene Fluoride, CSPE=Generic formulation of Hypalon, a registered trademark of E.I. DuPont Company. Viton is a registered trademark of E.I. DuPont Company. PVC wetted end recommended for sodium hypochlorite.

Engineering Data

Reproducibility: +/- 3% at maximum capacity

Viscosity Max CPS: 1000 CPS

Stroke Frequency Max SPM: 125

Stroke Length Turn-Down Ratio: 10:1

Power Input: 115 VAC/50-60 HZ/1 ph, 230 VAC/50-60 HZ/1 ph

Average Current Draw:

@ 115 VAC; Amps: 0.6 Amps

@ 230 VAC; Amps: 0.3 Amps @ 230 VAC

Peak Input Power: 130 Watts

Average Input Power @ Max SPM: 50 Watts

Dimensions

Series C Dimensions (inches)						
Model No.	A	B	C	D	E	Shipping Weight
LC02	5.0	9.6	9.5	6.5	8.2	10
LC03	5.0	9.9	9.5	6.5	8.5	10
LC04	5.0	9.9	9.5	6.5	8.5	10
LC54	5.0	9.9	9.5	6.5	8.5	10

NOTE: Inches X 2.54 = cm

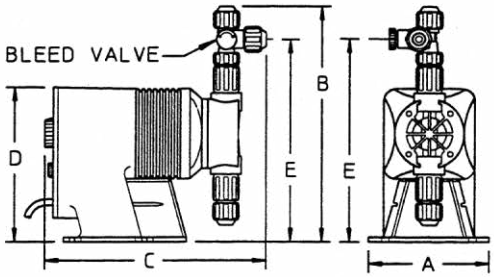

PULSAtron® Series C PLUS

Electronic Metering Pumps

PULSAFEEDER®
A Unit of IDEX Corporation

Key Features

- ***Manual Control*** by on-line adjustable stroke rate and stroke length.
- ***Agency approved*** for demanding ***OUTDOOR*** and indoor applications.
- ***Highly Reliable*** timing circuit.
- ***Water Resistant*** excellent for ***OUTDOOR*** and indoor applications.
- ***Internally Dampened To Reduce Noise,*** very acceptable for household installations.
- ***Guided Ball Check Valve Systems,*** to reduce back flow and enhance outstanding priming characteristics.
- ***Premium Standard Wetted Component Materials.***
- ***Few Moving Parts*** and ***Wall Mountable.***
- ***Safe & Easy Priming*** with durable leak-free **bleed valve assembly** (standard).
- ***Optional Control:*** External pace with auto/manual selection.

Complete Economical Selection

Four distinct models are available, having pressure capabilities to 80 PSIG, and flow capacities to 30 GPD, with a turndown ratio of 100:1. Metering performance is reproducible to within ± 3% of maximum capacity.

Please refer to the reverse side for Series C PLUS specifications.

Operating Benefits

Reliable metering performance. Our guided check valves, with their state-of-the-art seat and ball designs, provide precise seating, and excellent priming and suction lift characteristics. Our timing circuit is highly reliable and, by design, virtually unaffected by temperature, EMI and other electrical disturbances.

Rated "hot" for continuous duty. Series C PLUS pumps continue to meet their specifications for pressure and capacity even during extended use. That's because of our high quality solenoid and special enclosure that effectively dissipates heat.

High viscosity capability. A straight flow path and ample clearance between the diaphragm and head enable standard PULSAtron pumps to handle viscous chemicals up to a viscosity of 1000 CPS.

Leak-free, sealless, liquid end. Our diaphragms are of superior construction—PTFE-faced, bonded to a composite of Hypalon and fabric layers, and reinforced with a metal insert for optimum flexibility and durability.

System Compatibility

A wide variety of chemicals can be pumped.
Liquid end materials include glass-filled polypropylene (GFPPL), PVC, Polyvinylidene Fluoride (PVDF), PTFE, Hypalon, Viton, ceramic, alloys and 316SS.

Immediate installation and start-up.
Included as standard accessories with all models are an injection/back pressure valve assembly and a foot valve/strainer assembly*, including discharge and suction tubing.

Safe and easy priming and valve maintenance.
Included as a standard accessory is a bleed valve assembly, including return tubing (available only on those models with tubing connections).

Quick and economical liquid end maintenance.
Available for every model is a unique KOPkit®, a convenient, economically priced, package containing new cartridge check valves and other important spare parts.

For additional information about PULSAtron's full-featured Series MP & Series E PLUS, refer to Technical Sheet No. EMP-027 & EMP-021, about the mid-range Series E, Series D & Series A PLUS refer to Technical Sheet No. EMP-022, EMP-023 & EMP-025. For information about the economical Series C, refer to Technical Sheet No. EMP-024.

SPECIFICATIONS SUBJECT TO CHANGE WITHOUT NOTICE.

IDEX CORPORATION

technology innovation diversity excellence

PULSAtron Series C PLUS Specifications

Series C PLUS - Four model selections. Digit 1 and 2 (LD) signify product class, digit 3 and 4 signify pressure flow. For full model selection information refer to Price Schedule EMP-PS LP.

Pressure and Flow Rate Capacity

MODEL		LD02	LD03	LD04	LD54
Capacity	GPH	0.25	0.50	1.00	1.25
nominal	GPD	6	12	24	30
(max.)	LPH	0.9	1.9	3.8	4.7
Pressure	PSIG	80	80	80	80
(max.)	BAR	5.6	5.6	5.6	5.6
Connections:	Tubing	1/4" ID X 3/8" OD 3/8" ID X 1/2" OD			
	Piping	1/4" FNPT			
Reproducibiilty		+/- 3% at maximum capacity			
Viscosity Max CPS		1000 CPS			
Stroke Frequency		125 Strokes Per Minute (SPM) maximum			
Stroke Frequency Turn-Down		10:1			
Stroke Length Turn-Down		10:1			
Power Input		115 VAC/50-60 HZ/1 ph 230 VAC/50-60 HZ/1 ph			
Average Current Draw		0.6 Amps @ 115 VAC, 0.3 Amps @ 230 VAC			
Peak Input Power		130 Watts			
Average Input Power @ max		50 Watts			

Liquid End Materilas

Series	Pump Head	Diapragm	Check Valves		Fittings	Bleed Valve	Injection Valve Assembly Foot Valve	Tubing
			Seats/Orings	Balls				
C Plus	GFPPL PVC PVDF 316 SS	PTFE-faced Hypalon-backed	PTFE Hypalon Viton	Ceramic PTFE 316 SS Alloy C	GFPPL PVC PVDF	Same as fitting and check valve selected, except 316SS	Same as fitting and check valve selected	Clear PVC White PE

Important: Material Code— GFPPL = Glass-filled Polypropylene, PVC = Polyvinyl Chloride, PE = Polyethylene, PVDF = Polyvinylidene Fluoride. Hypalon and Viton are registered trademarks of E.I. DuPont Company. PVC wetted end recommended for sodium hypochlorite.

Dimensions

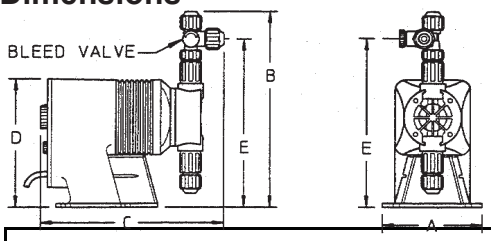

Series C PLUS Dimensions (inches)						
Model No.	A	B	C	D	E	Shipping Weight
LD02	5.0	9.6	9.5	6.5	8.2	10
LD03	5.0	9.9	9.5	6.5	8.5	10
LD04	5.0	9.9	9.5	6.5	8.5	10
LD54	5.0	9.9	9.5	6.5	8.5	10

NOTE: Inches X 2.54 = cm

KOPkit®

Available for every model, the KOPkit provides an economically priced package of parts required for routine maintenance. The kit typically contains new valve cartridges with o-rings, head, diaphragm, secondary o-ring seal, head screws and washers.

For further KOPkit information, refer to Technical Sheet No. GB-045.

PULSAFEEDER®
An IDEX Water & Wastewater Business IDEX

pulsafeeder.com

The Pulsatron Series E offers manual function controls over stroke length and stroke rate providing a turn down ratio of 100:1. Our best value in a pump with this capacity.

Twenty distinct models are available, having pressure capabilities to 300 PSIG (21 BAR) @ 3 GPD (0.5 lph), and flow capacities to 600 GPD (94.6 lph) @ 30 PSIG (2 BAR), with a turndown ratio of 100:1. Metering performance is reproducible to within ± 3% of maximum capacity.

Features

- Manual Control by on-line adjustable stroke rate and stroke length.
- Highly Reliable timing circuit.
- Circuit Protection against voltage and current upsets.
- Solenoid Protection by thermal overload with auto-reset.
- Water Resistant, for outdoor and indoor applications.
- Guided Ball Check Valve Systems, to reduce back flow and enhance outstanding priming characteristics.
- Safe & Easy Priming with durable leak-free bleed valve assembly (standard).

Controls

Manual Stroke Rate

- Turn-Down Ratio 10:1

Manual Stroke Length

- Turn-Down Ratio 10:1

Operating Benefits

- Reliable metering performance.
- Rated “hot” for continuous duty.
- High viscosity capability.
- Leak-free, sealless, liquid end.

Aftermarket

- KOPkits
- Gauges
- Dampeners
- Pressure Relief Valves

PULSAtron® Series E Electronic Metering Pumps

PULSAtron® Series E

Specifications and Model Selection

MODEL		LEK2	LE12	LE02	LE33	LE13	LE03	LEK3	LEF4	LE34	LE14	LEH4	LEG4	LE44	LEK5	LEH5	LEH6	LEK7	LEH7	LEJ7	LEH8
Capacity	GPH	0.13	0.21	0.25	0.50	0.50	0.50	0.60	0.85	0.90	1.00	1.70	1.75	1.85	2.50	3.15	5.00	8.00	10.00	10.00	25.00
nominal	GPD	3	5	6	12	12	12	14	20	22	24	41	42	44	60	76	120	192	240	240	600
(max.)	LPH	0.5	0.8	0.9	1.9	1.9	1.9	2.3	3.2	3.4	3.8	6.4	6.6	7	9.5	11.9	18.9	30.3	37.9	37.9	94.6
Pressure	PSIG	300	250	150	250	150	100	100	250	150	100	250	150	100	150	150	100	50	35	80	30
(max.)	BAR	21	17	10	17	10	7	7	17	10	7	17	10	7	10	10	7	3.3	2.4	5.5	2
Connections:	Tubing	1/4" ID X 3/8" OD 3/8" ID X 1/2" OD													3/8" ID X 1/2" OD 1/2" ID X 3/4" OD (LPH8 ONLY)						
	Piping	1/4" FNPT													1/4" FNPT 1/2" FNPT						

Engineering Data

Pump Head Materials Available: GFPPL, PVC, PVDF, 316 SS

Diaphragm: PTFE-faced CSPE-backed

Check Valves Materials Available:

Seats/O-Rings: PTFE, CSPE, Viton

Balls: Ceramic, PTFE, 316 SS, Alloy C

Fittings Materials Available: GFPPL, PVC, PVDF

Bleed Valve: Same as fitting and check valve selected, except 316SS

Injection Valve & Foot Valve Assy: Same as fitting and check valve selected

Tubing: Clear PVC, White PE

Important: Material Code - GFPPL=Glass-filled Polypropylene, PVC=Polyvinyl Chloride, PE=Polyethylene, PVDF=Polyvinylidene Fluoride, CSPE=Generic formulation of Hypalon, a registered trademark of E.I. DuPont Company. Viton is a registered trademark of E.I. DuPont Company. PVC wetted end recommended for sodium hypochlorite.

Engineering Data

Reproducibility: +/- 3% at maximum capacity

Viscosity Max CPS: For viscosity up to 3000 CPS, select connection size 3, 4, B or C with 316SS ball material. Flow rate will determine connection/ball size. Greater than 3000 CPS require spring loaded ball checks. See Selection Guide for proper connection.

Stroke Frequency Max SPM: 125

Stroke Frequency Turn-Down Ratio: 10:1

Stroke Length Turn-Down Ratio: 10:1

Power Input: 115 VAC/50-60 HZ/1 ph, 230 VAC/50-60 HZ/1 ph

Average Current Draw:

@ 115VAC; Amps: 1.0 Amps

@ 230 VAC; Amps: 0.5 Amps

Peak Input Power: 300 Watts

Average Input Power @ Max SPM: 130 Watts

Dimensions

Series E Dimensions (inches)

Model No.	A	B	B1	C	C1	D	E	Shpg Wt	Model No.	A	B	B1	C	C1	D	E	Shpg Wt
LE02	5	9.6	-	9.5	-	6.4	8.2	7	LEH4	6.2	10.9	-	11.2	-	8.2	9.5	18
LE03	5	9.8	-	9.5	-	6.4	8.4	7	LEH5	6.2	11.3	-	11.2	-	8.2	9.9	18
LE12	5	9.6	-	9.5	-	6.4	8.2	7	LEH6	6.2	11.3	-	11.2	-	8.2	9.9	18
LE13	5	9.8	-	9.5	-	6.4	8.4	7	LEH7	6.1	11.7	-	11.2	-	8.2	10.3	18
LE14	5	9.8	-	9.5	-	6.4	8.4	7	LEH8*	6.1	-	10.9	-	10.6	8.2	-	23
LE33	5.4	10.6	-	11.2	-	7.5	9.2	12	LEK2	5.4	10.3	-	10.8	-	7.5	8.9	10
LE34	5.4	10.6	-	11.2	-	7.5	9.2	12	LEK3	5.4	10.6	-	10.7	-	7.5	9.2	10
LE44	5.4	10.6	-	11.2	-	7.5	9.2	12	LEK5	5.4	10.9	-	11.7	-	7.5	9.5	15
LEF4	5.4	10.6	-	11.7	-	7.5	9.2	15	LEK7	6.1	11.7	-	11.2	-	8.2	10.3	18
LEG4	5.4	10.6	-	11.7	-	7.5	9.2	15	LEJ7	6.1	10.0	-	10.7	-	-	-	18

NOTE: Inches X 2.54 = cm

* the LEH8 is designed without a bleed valve available

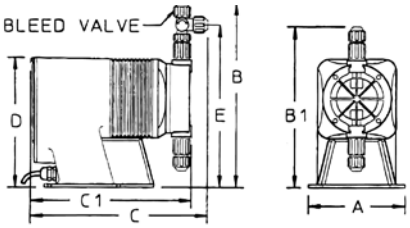

PULSAFEEDER®
An IDEX Water & Wastewater Business IDEX

pulsafeeder.com

The Pulsatron Series MP is a true microprocessor controlled instrument for precise and accurate metering control. Packed with standard features, the Series MP include automatic control via 4-20mA or 20-4 mA inputs, external pace with stop feature and 16 character LCD display with support for English, French, and German languages.

Nineteen distinct models are available, having pressure capabilities to 300 PSIG (21 BAR) @ 3 GPD (0.5 lph), and flow capacities to 504 GPD (79.5 lph) @ 20 PSIG (13 BAR), with a turndown ratio of 1000:1. Metering performance is reproducible to within ± 2% of maximum capacity.

Features

- Automatic Control, Fully scalable 4-20mA current signal.
- Flow Verification on select sizes.
- Flow Totalization.
- Relay Output for computer interface or AC power.
- Simple Prompts in plain language.
- Available in four languages, English, French, German, and Spanish.
- Alarm Signals for signal loss, full count, circuit failure, pulse overflow and pulse rate high.
- Liquid low-level indicator capability is standard.
- Timed Sequences can be set for selected intervals and rate for repetitive metering.
- Pulse Signals can be multiplied or divided by 1 to 999.
- Flow Rate is displayed as GPH, GPD, or LPH.
- Large easy to read backlit LCD display.

Controls

Manual Stroke Rate

- Turn-Down Ratio 100:1

Stroke Length

- Turn-Down Ratio 10:1

4-20mA or 20-4mA Input

- Automatic Control
- Fully Scalable
- Turn-Down Ratio 100:1

Flow Verification

- Monitors pump output to protect against loss of flow.
- Visual Notification.

Operating Benefits

- Reliable metering performance.
- Rated “hot” for continuous duty.
- High viscosity capability.
- Leak-free, sealless, liquid end.

Aftermarket

- KOPkits
- Gauges
- Dampeners
- Pressure Relief Valves

PULSAtron® Series MP Electronic Metering Pumps

PULSAtron® Series MP

Specifications and Model Selection

MODEL		LMK2	LMB2	LMA2	LMD3	LMB3	LMA3	LMK3	LMF4	LMD4	LMB4	LMH4	LMG4	LME4	LMK5	LMH5	LMH6	LMK7	LMH7	LMH8
Capacity nominal (max.)	GPH	0.13	0.21	0.25	0.50	0.50	0.50	0.60	0.85	0.90	1.00	1.70	1.75	1.85	2.50	3.15	5.00	8.00	10.00	21.00
	GPD	3	5	6	12	12	12	14	20	22	24	41	42	44	60	76	120	192	240	504
	LPH	0.5	0.8	0.9	1.9	1.9	1.9	2.3	3.2	3.4	3.8	6.4	6.6	7.0	9.5	11.9	18.9	30.3	37.9	79.5
Pressure (max.)	PSIG	300	250	150	250	150	100	100	250	150	100	250	150	100	150	150	100	50	35	20
	BAR	21	17	10	17	10	7	7	17	10	7	17	10	7	10	10	7	3.3	2.4	1.3
Connectio	Tubing	1/4" ID X 3/8" OD 3/8" ID X 1/2" OD													3/8" ID X 1/2" OD 1/2" ID X 3/4" OD (LPH8 ONLY) FLOW VERIFICATION (See Note)					
	Piping	1/4" FNPT													1/4" FNPT 1/2" FNPT					

Note: Flow Verification: Available on K3, B4 and E4 with connection code 1; H6, K7 and H7 with connection code H; 1/4" ID x 3/8" OD only.

Engineering Data

Pump Head Materials Available: GFPPL, PVC, PVDF, 316 SS

Diaphragm: PTFE-faced CSPE-backed

Check Valves Materials Available:

Seats/O-Rings: PTFE, CSPE, Viton

Balls: Ceramic, PTFE, 316 SS, Alloy C

Fittings Materials Available: GFPPL, PVC, PVDF

Bleed Valve: Same as fitting and check valve selected, except 316SS

Injection Valve & Foot Valve Assy: Same as fitting and check valve selected

Tubing: Clear PVC, White PE

Important: Material Code - GFPPL=Glass-filled Polypropylene, PVC=Polyvinyl Chloride, PE=Polyethylene, PVDF=Polyvinylidene Fluoride, CSPE=Generic formulation of Hypalon, a registered trademark of E.I. DuPont Company. Viton is a registered trademark of E.I. DuPont Company. PVC wetted end recommended for sodium hypochlorite.

Engineering Data

Reproducibility: +/- 2% at maximum capacity

Viscosity Max CPS:

For viscosity up to 3000 CPS, select connection size 3, 4, B or C with 316SS ball material. Flow rate will determine connection/ball size. Greater than 3000 CPS require spring loaded ball checks. See Selection Guide for proper connection.

Controls: 6-Station Membrane Switch

Status Display: 16-Position LCD Dot Matrix Backilght

LED Indicator Lights, Panel Mount: Power On - Green, Pulsing - Green Flashing, Stop - Red

Stroke Frequency Max SPM: 125

External Stroke Frequency Control (Automatic): 4-20 mADC, 20-4 mADC External Pacing

Output Relay (Signal Level Option): 24 VDC, 10 mA

Output Relay (Power Option): 250 VAC, 50/60 HZ, 0.5A

Stroke Frequency Turn-Down Ratio: 100:1

Stroke Length Turn-Down Ratio: 10:1

Power Input: 115 VAC/50-60 HZ/1 ph, 230 VAC/50-60 HZ/1 ph

Average Current Draw:

@ 115 VAC; Amps: 1.0 Amps

@ 230 VAC; Amps: 0.5 Amps

Peak Input Power: 300 Watts

Average Input Power @ Max SPM: 130 Watts

Dimensions

Series MP Dimensions (inches)																	
Model No.	A	B	B1	C	C1	D	E	Shpg Wt	Model No.	A	B	B1	C	C1	D	E	Shpg Wt
LMA2	5.4	10.3	-	10.8	-	7.5	8.9	13	LMH4	6.2	10.9	-	11.2	-	8.2	9.5	21
LMA3	5.4	10.6	-	10.7	-	7.5	9.2	13	LMH5	6.2	11.3	-	11.2	-	8.2	9.9	21
LMB2	5.4	10.3	-	10.8	-	7.5	8.9	13	LMH6	6.2	11.3	-	11.2	-	8.2	9.9	21
LMB3	5.4	10.6	-	10.7	-	7.5	9.2	13	LMH7	6.1	11.7	-	11.2	-	8.2	10.3	21
LMB4	5.4	10.6	-	10.7	-	7.5	9.2	13	LMH8*	6.1	-	10.9	-	10.6	8.2	-	25
LMD3	5.4	10.6	-	11.2	-	7.5	9.2	15	LMK2	5.4	10.3	-	10.8	-	7.5	8.9	13
LMD4	5.4	10.6	-	11.2	-	7.5	9.2	15	LMK3	5.4	10.6	-	10.7	-	7.5	9.2	13
LME4	5.4	10.6	-	11.2	-	7.5	9.2	15	LMK5	5.4	10.9	-	11.7	-	7.5	9.5	18
LMF4	5.4	10.6	-	11.7	-	7.5	9.2	18	LMK7	6.1	11.7	-	11.2	-	8.2	10.3	21
LMG4	5.4	10.6	-	11.7	-	7.5	9.2	18									

NOTE: Inches X 2.54 = cm / * the LMH8 is designed without a bleed valve available

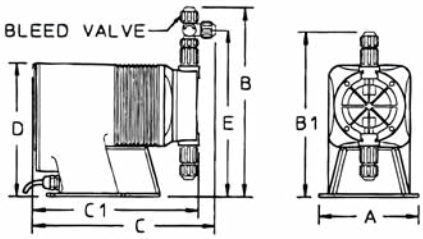

PULSAFEEDER®

The Chem-Tech Series XP with peristaltic technology delivers worry-free dosing in a modern design. Each and every component of the Series XP is designed and manufactured for optimum reliability and durability for ***REAL Performance***.

The electronic timing circuit in the adjustable 'A' Models provides ***reliable*** pump control, without relying on mechanical adjustment components that wear out over time.

The intuitive interface and controls provide ***easy*** operation and the peristaltic design is virtually maintenance-free.

Tailor-made for the water conditioning market, the Series XP offer ***affordable s***olutions in both initial cost and operation.

A rugged gear train and computer-aided peristaltic design ensure ***long-lasting*** performance.

Features

- Fixed Models. Simple and straight forward fixed rate pumps for applications where economy and ease-of-use are required.
- Adjustable Models. Electronic timer module provides a 20:1 turndown control for enhanced flexibility.
- Pulse Input Models. Internal timer accepts pulses from a contacting head water meter. Adjustable to run the pumps form .1 to 1 sec., .2 to 10 sec., or from 1.0 to 60 sec. per pulse.
- Flow Switch Activated Models. Activated when flow rate through the included ¾" NPT flow switch reaches 1 GPM and deactivated when flow rate is less than 1 GPM.
- Dry Contact Input Models. Activates pump upon closure of a dry contact switch, and deactivates when opened. Pump equipped with a 6' lead for connection to the customer supplied switch.
- Timer Models. 7 Day – 8 Event Electronic Timer.
- Duplex Head Models. Two pump heads to deliver twice the flow, or the rated flow of two different chemicals simultaneously.
- Tubing Materials. Standard Norprene tube material in Low Pressure ratings - extended tube life, High Pressure ratings - meet demanding system requirements. Fluran tubing - greater chemical resistance: contact Technical Service for compatibility.

Operating Benefits

- Reliable metering performance.
- Mixed fluid capable. Inherently degassing.
- Extended tube life.
- Rugged, sealed gear train.
- Easy tube change-out.
- Self priming.
- Chemical resistant materials.
- Simple installation.

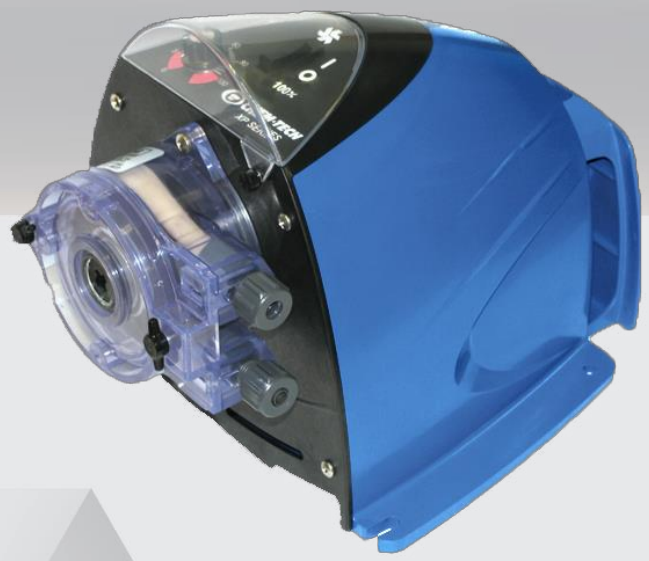

Controls

Fixed Rate Model

- Simple and straight-forward fixed rate pumps.

Adjustable Model

- 20:1 Turndown Control

Three Input Models

- Pulse Input
- Flow Switch Activated
- Dry Contact Input

Timer Model

- 7 Day – 8 Event Electronic Timer

Aftermarket

- KOPkits
- Gauges
- Dampeners
- Pressure Relief Valves

Tested and Certified by WQA against NSF/ANSI 61-Section 8. and CSA B483.1

CHEM·TECH **Series XP**

Peristaltic Metering Pumps

CHEM·TECH Series XP

Specifications and Model Selection

MODELS:	Flow	Pressure Rating - PSI (Bar)				Tube Size	Speed (RPM)
		Single Head Options			Duplex		
		'H' Tube	'L' Tube	'F' Tube	'L' Tube		
XP004	4 GPD (0.6 LPH)	125 (8.6)	80 (5.5)	60 (4.1)	80 (5.5)	2	30
XP007	7 GPD (1.1 LPH)						50
XP009	9 GPD (1.4 LPH)	110 (7.6)	70 (4.8)	50 (3.4)	70 (4.8)	3	30
XP015	15 GPD (2.4 LPH)						50
XP014	14 GPD (2.3 LPH)	100 (5.9)	50 (3.4)	40 (2.8)	50 (3.4)	4	30
XP023	23 GPD (3.6 LPH)						50
XP030	30 GPD (4.7 LPH)	80 (5.5)	40 (2.8)		40 (2.8)	6	30
XP050	50 GPD (7.9 LPH)						50
XP048	48 GPD (7.5 LPH)		25 (1.7)		25 (1.7)	8	30
XP080	80 GPD (12.6 LPH)						50

Engineering Data

Drive:

Fixed Rate	On. Off Only Duplex Head Dry Contact Input Flow Switch Activated 7 Day-8Event Electronic Timer
Adjustable	20:1 Turndown Duplex Head Dry Contact Input Flow Switch Activated
Pulse Input	.1 to 1 Second Timer .2 to 10 Second Timer 1 to 60 Second Timer

Tubing:

Norprene Low Pressure	1/4" or 3/8" Tube Fittings
Norprene High Pressure	1/4" or 3/8" Tube Fittings
Fluran	1/4" or 3/8" Tube Fittings (Does not include strainer & Injector accessories)
Viscosity Max CPS:	300 CPS
Enclosure:	NEMA 3R / IP31 (In Horizontal Position)
Power Input:	115 VAC/60 HZ, 1/6 HP 230 VAC/50/60 HZ 230 VAC/60 HZ
Temperature Limitations:	104ºF / 40ºC max.
Shipping Weight:	8 lbs. / 3.63kg.

Dimensions **All dimensions expressed as inches (mm)**

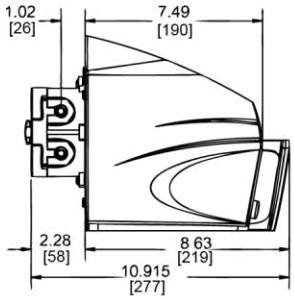

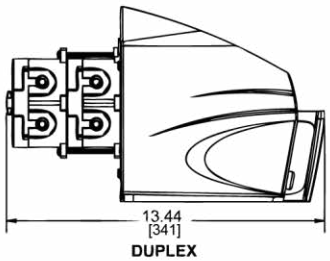

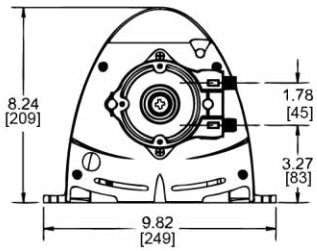

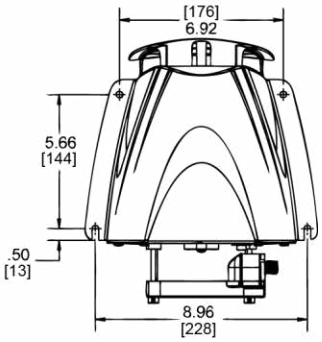

Product Overview

PULSAtron®

Series MP - Electronic Metering Pumps

Flow	Max Pressure	Stroke and Rate	Other controls	Viscosity
3 - 504 gpd 0.13 - 21 gph (0.5 - 79.5 lph)	300 psi (21 bar)	Digital Rate Manual Stroke	Scalable 4-20 mA and Pulse input with Remote stop	1000 cps standard > 3000 + optional

- Turn Down: 1000:1
- Programmable control with 4-20 mA or, pulse, Pulse multiply/divide, timed, fixed speed and count operations
- Flow verification optional with flow accessory sold separately
- Degas head option
- Six button key pad and LCD backlit display, alarm signal relay output

Agency

Tested and Certified by WQA against NSF/ANSI 61-Section 8. and CSA B483.1 (PVDF and Degassing Head Pumps, see www.wqa.org for certification parameters.)

Series E - Electronic Metering Pumps

Flow	Max Pressure	Stroke and Rate	Other controls	Viscosity
5 - 44 gpd 0.21 - 1.85 gph (0.8 - 7 lph)	250 psi (17 bar)	Manual Rate Manual Stroke	Manual control only	1000 cps

- Turn Down: 100:1
- Manual rate and stroke control
- Degas head option

Agency

Tested and Certified by WQA against NSF/ANSI 61-Section 8. and CSA B483.1 (PVDF and Degassing Head Pumps, see www.wqa.org for certification parameters.)

Series A PLUS - Electronic Metering Pumps

Flow	Max Pressure	Stroke and Rate	Other controls	Viscosity
6 - 58 gpd 0.25 - 2.42 gph (0.9 - 9.14 lph)	250 psi (17 bar)	Manual Rate Manual Stroke	Optional external pace & Optional stop	1000 cps

- Turn Down: 100:1 and 1000:1
- Manual rate and stroke control
- Automatic control by external pacing (optional)
- Degas head option

Agency

Tested and Certified by WQA against NSF/ANSI 61-Section 8. and CSA B483.1 (PVDF and Degassing Head Pumps, see www.wqa.org for certification parameters.)

Product Overview

Series C PLUS - Electronic Metering Pumps

PULSAtron®

Flow	Max Pressure	Stroke and Rate	Other controls	Viscosity
6 - 30 gpd 0.25 - 1.25 gph (0.90 - 4.7 lph)	80 psi (5.5 bar)	Manual Rate Manual Stroke	Optional external pace & Optional stop	1000 cps

- Turn Down: 100:1
- Manual control by on-line adjustable stroke rate and stroke length
- Automatic control by external pacing (optional)
- Degas head option

Agency

Intertek 9700150 · Intertek 9700150 · CE · WQA

Tested and Certified by WQA against NSF/ANSI 61-Section 8. and CSA B483.1 (PVDF and Degassing Head Pumps, see www.wqa.org for certification parameters.)

Series C - Electronic Metering Pumps

Flow	Max Pressure	Stroke and Rate	Other controls	Viscosity
6 - 30 gpd 0.25 - 1.25 gph (0.90 - 4.7 lph)	80 psi (5.5 bar)	Fixed Rate Manual Stroke	Optional external pace & Optional stop	1000 cps

- Turn Down: 10:1
- Manual control by on-line adjustable stroke rate and stroke length
- Automatic control by external pacing (optional)
- Degas head option

Agency

Intertek 9700150 · Intertek 9700150 · CE · WQA

Tested and Certified by WQA against NSF/ANSI 61-Section 8. and CSA B483.1 (PVDF and Degassing Head Pumps, see www.wqa.org for certification parameters.)

Series XP - Peristaltic Pumps

CHEM-TECH

Flow	Max Pressure	Control	Other controls	Viscosity
4 - 80 gpd 0.16 - 3.33 gph (0.6 - 12.6 lph)	125 psi (8.6 bar)	Fixed or 2 sec. % On/Off	Pulse, Dry contact or 7 day timer	300 cps

- Turn Down: 20:1
- Peristaltic pump NSF 61 WQA certified
- Fixed rate, On / Off percent timer or Pulse / Dry contact input control
- Long life Norprene or Fluran tubing element

Agency

Intertek 9700150 · WQA

Tested and Certified by WQA against NSF/ANSI 61-Section 8. and CSA B483.1

PULSAtron Wet End and Chemical Compatability

PULSAtron pumps are compatible with a wide variety of metering applications. Refer to the guide below to determine which materials can be used for common applications. The tables that follow this page have the pumps listed by series and by flow and pressure.

Chemical Compatibility Chart						
	(Best)	(Common)	(Alternate)	(Compatible selections)		
Chemical	Liquid End Code	Liquid End Code	Liquid End Code	Head/Valve	Seat	Check Ball
ACETIC ACID, 5 - 10%	KTC	PHC	PTC	K, P,	T, H	C, T, H
ALUMINUM SULFATE	KTC	PVC	VVC	K, V / W, P	T, H, V	C, T, H
AMMONIA, 10%	KTC	PVC	VVC	K, V / W, P, A	T, H, V,	C, T, S, H
BROMINE	KTC	KVC	KTT	K	T, V	C, T, H
CALCIUM HYPOCHLORITE	KTC	VHC	KTT	K, V / W	T, H	C, T, H
CITRIC ACID, 10 - 20%	KTC	VVC	VHC	K, V / W, P	T, H, V	C, T, S, H
DEAE - Steamline Treatment (DIETHYLAMINE)	ATS	PTS	PTH	P, A	T	S, H
ETHYLENE GLYCOL	KTC	PHC	PVC	K, V/W, P, A	T, H, V	C, T, S, H
FERRIC CHLORIDE	KTC	PHC	PVC	K, V / W, P	T, H, V	C, T
FERRIC SULFATE	KTC	PHC	PVC	K, V / W, P	T, H, V	C, T, H
FLUOSILICIC ACID	KTT	PTT	PHT	K, V / W, P	T, V	T, H
HYDROCHLORIC ACID, 0 - 37%	KTC	PTC	PVC	K, V / W, P	T, V	C, T, H
HYDROCHLORIC ACID, 37 - 100%	KTT	PTT	PVT	K, P,	T, V	T, H
HYDROFLUOSILICIC ACID, 20%	KTT	PTT	PVT	K, V / W, P	T, H, V	T, H
HYDROGEN PEROXIDE, 0 - 30%	KTC	PHC	PVC	K, V / W, P	T, H, V	C, T, S, H
LACTIC ACID	KTC	PTC	PVC	K, V / W, P, A	T, H, V	C, T, S
NITRIC ACID, 0 - 20%	KTC	PTC	PVC	K, V / W, P, A	T, H, V	C, T, S, H
PHOSPHORIC ACID, 0 - 100%	KTC	PTC	PHC	K, V / W, P, A	T, H, V	C, T, S, H
POTASSIUM CHLORIDE	KTC	PTC	PHC	K, V / W, P	T, H, V	C, T, H
POTASSIUM PERMANGANATE	KTC	PTC	PHC	K, V / W, P, A	T, H, V	C, T, S, H
SODIUM BI-CARBONATE	KTC	PTC	PHC	K, V / W, P, A	T, H, V	C, T, S, H
SODIUM BI-SULFATE	KTC	PTC	PHC	K, V / W, P, A	T, H, V	C, T, S
SODIUM BI-SULFITE	KTC	PTC	PVC	K, V / W, P, A	T, H, V	C, T, S
SODIUM CARBONATE	KTC	PTC	PVC	K, V / W, P, A	T, H, V	C, T, S, H
SODIUM HYDROXIDE, 0 - 50%	KTC	PHC	PTC	K, V / W, P, A	T, H	C, T, S, H
SODIUM HYPOCHLORITE	KTC	VVC	VTC	K, V / W	T, H, V	C, T, H
SODIUM NITRATE	KTC	PTC	PVC	K, V / W, P, A	T, H, V	C, T, S, H
SODIUM SILICATE	KTC	PHC	PTC	K, V / W, P, A	T, H, V	C, T, S, H
SODIUM SULFATE	KTC	PHC	PTC	K, V / W, P, A	T, H, V	C, T, S, H
SODIUM SULFIDE	KTC	PHC	PTC	K, V / W, P, A	T, H, V	C, T, S,
SULFURIC ACID, 0 - 10%	KTC	PTC	PVC	K, V / W, P	T, V	C, T
SULFURIC ACID, 10 - 75%	KTC	PTC	PVC	K, V / W, P	T, V	C, T
SULFURIC ACID, 95 - 100%	KTC	KTC	KVC	K	T, V	C, T

PULSAtron® Series MP - Electronic Metering Pumps

- Tubing: PVDF Tube "130" and Black Tubing "055" change the suffix code from "XXX" to "130" or "055".
- Five Function Valve option change the suffix code from “XXX” to “500”.
- 230 VAC input power, change the letter “A” to the letter “B” in position six (6) of the model number.
- CE approval, Change the letter “A” to the number “2” and change the suffix code from “XXX” to “CZXXX” (EU), "CZUKXXX" (UK), or "CZSUIXXX" (CH/ LIE).
- Other options are sold separately.

LMK2 — MAX FLOW RATE: 0.13 gph / 3 gpd (0.5 lph) max pressure: 300 PSI (21 BAR)

Model Number	List Price	Controls	Voltage	Head Fittings	Seats / O-Rings	Balls	Options	KOPkit #	List Price
LMK2TA-KTCJ-XXX	$1,175.00	Signal Level	115V	PVDF	TFE	CER	Q.P./Standard	**K2KTCJ**	$193.00
LMK2T2-KTCJ-CZXXX	$1,202.00	Signal Level	230V	PVDF	TFE	CER	Q.P./CE Approval	**K2KTCJ**	$193.00
LMK2TA-WTCJ-XXX	$1,109.00	Signal Level	115V	PVC	TFE	CER	Q.P./Standard	**K2WTCJ**	$111.00

LMB2 — MAX FLOW RATE: 0.21 gph / 5 gpd (0.8 lph) max pressure: 250 PSI (17 BAR)

Model Number	List Price	Controls	Voltage	Head Fittings	Seats / O-Rings	Balls	Options	KOPkit #	List Price
LMB2TA-PTCJ-XXX	$1,109.00	Signal Level	115V	GFPPL	TFE	CER	Q.P./Standard	**K2PTCJ**	$98.00
LMB2TB-PTCJ-XXX	$1,136.00	Signal Level	230V	GFPPL	TFE	CER	Q.P./Standard	**K2PTCJ**	$98.00
LMB2T2-PTCJ-CZXXX	$1,136.00	Signal Level	230V	GFPPL	TFE	CER	Q.P./CE Approval	**K2PTCJ**	$98.00

LMD3 — MAX FLOW RATE: 0.50 gph / 12 gpd (1.9 lph) max pressure: 250 PSI (17 BAR)

Model Number	List Price	Controls	Voltage	Head Fittings	Seats / O-Rings	Balls	Options	KOPkit #	List Price
LMD3TA-KTCJ-XXX	$1,270.00	Signal Level	115V	PVDF	TFE	CER	Q.P./Standard	**K3KTCJ**	$195.00
LMD3TA-PTCJ-XXX	$1,205.00	Signal Level	115V	GFPPL	TFE	CER	Q.P./Standard	**K3PTCJ**	$99.00
LMD3TA-WTCJ-XXX	$1,205.00	Signal Level	115V	PVC	TFE	CER	Q.P./Standard	**K3WTCJ**	$113.00

LMF4 — MAX FLOW RATE: 0.85 gph / 20 gpd (3.2 lph) max pressure: 250 PSI (17 BAR)

Model Number	List Price	Controls	Voltage	Head Fittings	Seats / O-Rings	Balls	Options	KOPkit #	List Price
LMF4TA-KTC1-XXX	$1,614.00	Signal Level	115V	PVDF	TFE	CER	Standard	**K4KTC1**	$209.00
LMF4TA-KTC1-130	$1,750.00	Signal Level	115V	PVDF	TFE	CER	PVDF Tube	**K4KTC1**	$209.00
LMF4TA-KTC1-500	$1,699.00	Signal Level	115V	PVDF	TFE	CER	5 Func. Valve	**K4KTC1**	$209.00
LMF4TA-WTC1-XXX	$1,549.00	Signal Level	115V	PVC	TFE	CER	Standard	**K4WTC1**	$122.10
LMF4TA-WTC1-055	$1,549.00	Signal Level	115V	PVC	TFE	CER	Black Disc. Tube	**K4WTC1**	$127.00
LMF4TA-WTC1-500	$1,634.00	Signal Level	115V	PVC	TFE	CER	5 Func. Valve	**K4WTC1**	$127.00
LMF4TB-WTC1-XXX	$1,576.00	Signal Level	230V	PVC	TFE	CER	Standard	**K4WTC1**	$127.00

LMH4 — MAX FLOW RATE: 1.70 gph / 41 gpd (6.4 lph) max pressure: 250 PSI (17 BAR)

	List Price	Controls	Voltage	Head Fittings	Seats / O-Rings	Balls	Options	KOPkit #	List Price
LMH4TA-KTC1-XXX	$1,9885.00	Signal Level	115V	PVDF	TFE	CER	Standard	**K4KTC1**	$209.00
LMH4TA-KTC1-130	$2,123.00	Signal Level	115V	PVDF	TFE	CER	PVDF Tube	**K4KTC1**	$209.00
LMH4TA-KTC1-500	$2,074.00	Signal Level	115V	PVDF	TFE	CER	5 Func. Valve	**K4KTC1**	$209.00
LMH4TB-KTC1-130	$2,151.00	Signal Level	230V	PVDF	TFE	CER	PVDF Tube	**K4KTC1**	$209.00
LMH4TA-PTC1-XXX	$1,923.00	Signal Level	115V	GFPPL	TFE	CER	Standard	**K4PTC1**	$114.00
LMH4TA-PTC1-500	$2,008.00	Signal Level	115V	GFPPL	TFE	CER	5 Func. Valve	**K4PTC1**	$114.00
LMH4TA-WTC1-XXX	$1,923.00	Signal Level	115V	PVC	TFE	CER	Standard	**K4WTC1**	$127.00
LMH4TA-WTC1-500	$2,008.00	Signal Level	115V	PVC	TFE	CER	5 Func. Valve	**K4WTC1**	$127.00
LMH4TB-WTC1-XXX	$1,949.00	Signal Level	230V	PVC	TFE	CER	Standard	**K4WTC1**	$127.00

LMA2 — MAX FLOW RATE: 0.25 gph / 6 gpd (0.9 lph) max pressure: 150 PSI (10 BAR)

Model Number	List Price	Controls	Voltage	Head Fittings	Seats / O-Rings	Balls	Options	KOPkit #	List Price
LMA2KA-VTT1-XXX	$1,154.00	Power Level	115V	PVC	TFE	TFE	Standard	**K2VTT1**	$98.00
LMA2TA-VTCJ-XXX	$1,104.00	Signal Level	115V	PVC	TFE	CER	Q.P./Standard	**K2VTCJ**	$98.00
LMA2TA-VTCJ-500	$1,190.00	Signal Level	115V	PVC	TFE	CER	Q.P./5 Func. Vlv	**K2VTCJ**	$98.00
LMA2TA-VTC9-XXX	$1,231.00	Signal Level	115V	PVC	TFE	CER	Degas/Standard	**K2VTC9**	$217.00
LMA2TA-VVC9-XXX	$1,225.00	Signal Level	115V	PVC	Viton	CER	Degas/Standard	**K2VVC9**	$213.00

Series MP - Electronic Metering Pumps

LMB3	MAX FLOW RATE: 0.50 gph / 12 gpd (1.9 lph) max pressure: 150 PSI (10 BAR)								
Model Number	**List Price**	**Controls**	**Voltage**	**Head Fittings**	**Seats / O-Rings**	**Balls**	**Options**	**KOPkit #**	**List Price**
LMB3TA-ATSG-XXX	**$1,539.00**	Signal Level	115V	316 SS	TFE	316 SS	Standard	**K3ATSG**	$615.00
LMB3TA-KTCJ-XXX	**$1,204.00**	Signal Level	115V	PVDF	TFE	CER	Q.P./Standard	**K3KTCJ**	$195.00
LMB3TA-PTC1-XXX	**$1,139.00**	Signal Level	115V	GFPPL	TFE	CER	Standard	**K3PTC1**	$100.00
LMB3TA-PTC1-500	**$1,223.00**	Signal Level	115V	GFPPL	TFE	CER	5 Func. Valve	**K3PTC1**	$100.00
LMB3TB-PTC1-XXX	**$1,165.00**	Signal Level	230V	GFPPL	TFE	CER	Standard	**K3PTC1**	$100.00
LMB3T2-PTC1-CZXXX	**$1,165.00**	Signal Level	230V	GFPPL	TFE	CER	CE Approval	**K3PTC1**	$100.00
LMB3TA-VTCJ-XXX	**$1,139.00**	Signal Level	115V	PVC	TFE	CER	Degas/Standard	**K3VTCJ**	$100.00
LMB3TA-VTC9-XXX	**$1,265.00**	Signal Level	115V	PVC	TFE	CER	Degas/Standard	**K3VTC9**	$219.00
LMB3TA-VVC9-XXX	**$1,260.00**	Signal Level	115V	PVC	Viton	CER	Degas/Standard	**K3VVC9**	$215.00

LMD4	MAX FLOW RATE: 0.90 gph / 22 gpd (3.4 lph) max pressure: 150 PSI (10 BAR)								
Model Number	**List Price**	**Controls**	**Voltage**	**Head Fittings**	**Seats / O-Rings**	**Balls**	**Option**	**KOPkit #**	**List Price**
LMD4TA-PTC1-XXX	$1,256.00	Signal Level	115V	GFPPL	TFE	CER	Standard	**K4PTC1**	$114.00
LMD4TA-PTC1-500	$1,340.00	Signal Level	115V	GFPPL	TFE	CER	5 Func. Valve	**K4PTC1**	$114.00
LMD4TB-PTC1-XXX	$1,282.00	Signal Level	230V	GFPPL	TFE	CER	Standard	**K4PTC1**	$114.00
LMD4T2-PTC1-CZXXX	$1,282.00	Signal Level	230V	GFPPL	TFE	CER	CE Approval	**K4PTC1**	$114.00
LMD4TA-VTC1-XXX	$1,256.00	Signal Level	115V	PVC	TFE	CER	Standard	**K4VTC1**	$114.00
LMD4TA-VTC1-500	$1,340.00	Signal Level	115V	PVC	TFE	CER	5 Func. Valve	**K4VTC1**	$114.00
LMD4TB-VTC1-XXX	$1,282.00	Signal Level	230V	PVC	TFE	CER	Standard	**K4VTC1**	$114.00
LMD4TA-VVC9-XXX	$1,377.00	Signal Level	115V	PVC	Viton	CER	Degas/Standard	**K4VVC9**	$230.00

LMG4	MAX FLOW RATE: 1.75 gph / 42 gpd (6.6 lph) max pressure: 150 PSI (10 BAR)								
Model Number	**List Price**	**Controls**	**Voltage**	**Head Fittings**	**Seats / O-Rings**	**Balls**	**Option**	**KOPkit #**	**List Price**
LMG4TA-KTC1-XXX	$1,684.00	Signal Level	115V	PVDF	TFE	CER	Standard	**K4KTC1**	$210.00
LMG4TA-KTC1-130	$1,820.00	Signal Level	115V	PVDF	TFE	CER	PVDF Tube	**K4KTC1**	$210.00
LMG4TA-KTC1-500	$1,769.00	Signal Level	115V	PVDF	TFE	CER	5 Func. Valve	**K4KTC1**	$210.00
LMG4TB-KTC1-XXX	$1,711.00	Signal Level	230V	PVDF	TFE	CER	Standard	**K4KTC1**	$210.00
LMG4T2-KTC1-CZXXX	$1,711.00	Signal Level	230V	PVDF	TFE	CER	CE Approval	**K4KTC1**	$210.00
LMG4TA-VTC1-XXX	$1,619.00	Signal Level	115V	PVC	TFE	CER	Standard	**K4VTC1**	$114.00
LMG4TA-VTC1-500	$1,704.00	Signal Level	115V	PVC	TFE	CER	5 Func. Valve	**K4VTC1**	$114.00
LMG4TB-VTC1-XXX	$1,646.00	Signal Level	230V	PVC	TFE	CER	Standard	**K4VTC1**	$114.00
LMG4TA-VVC1-XXX	$1,613.00	Signal Level	230V	PVC	Viton	CER	Standard	**K4VVC1**	$111.00
LMG4TA-VTC9-XXX	$1,746.00	Signal Level	115V	TFE	Viton	CER	Degas/Standard	**K4VTC9**	$234.00
LMG4TA-VVC9-XXX	$1,741.00	Signal Level	115V	PVC	Viton	CER	Degas/Standard	**K4VVC9**	$230.00

LMK5	MAX FLOW RATE: 2.50 gph / 60 gpd (9.5 lph) max pressure: 150 PSI (10 BAR)								
Model Number	**List Price**	**Controls**	**Voltage**	**Head Fittings**	**Seats / O-Rings**	**Balls**	**Option**	**KOPkit #**	**List Price**
LMK5TA-KTC3-XXX	$1,684.00	Signal Level	115V	PVDF	TFE	CER	Standard	**K5KTC3**	$230.00
LMK5TA-KTC3-130	$1,820.00	Signal Level	115V	PVDF	TFE	CER	PVDF Tube	**K5KTC3**	$230.00
LMK5TA-KTC3-500	$1,769.00	Signal Level	115V	PVDF	TFE	CER	5 Func. Valve	**K5KTC3**	$230.00
LMK5TB-KTC3-XXX	$1,711.00	Signal Level	230V	PVDF	TFE	CER	Standard	**K5KTC3**	$230.00
LMK5TA-PTC3-XXX	$1,619.00	Signal Level	115V	GFPPL	TFE	CER	Standard	**K5PTC3**	$134.00
LMK5TA-PTC3-500	$1,704.00	Signal Level	115V	GFPPL	TFE	CER	5 Func. Valve	**K5PTC3**	$134.00
LMK5TB-PTC3-XXX	$1,646.00	Signal Level	230V	GFPPL	TFE	CER	Standard	**K5PTC3**	$134.00
LMK5TA-VHC3-XXX	$1,606.00	Signal Level	115V	PVC	CSPE	CER	Standard	**K5VHC3**	$121.00
LMK5TA-VHC3-500	$1,691.00	Signal Level	115V	PVC	CSPE	CER	5 Func. Valve	**K5VHC3**	$121.00
LMK5TA-VTC3-XXX	$1,619.00	Signal Level	115V	PVC	TFE	CER	Standard	**K5VTC3**	$134.00
LMK5TA-VTC3-500	$1,704.00	Signal Level	115V	PVC	TFE	CER	5 Func. Valve	**K5VTC3**	$134.00
LMK5TB-VTC3-500	$1,730.00	Signal Level	230V	PVC	TFE	CER	5 Func. Valve	**K5VTC3**	$134.00
LMK5TB-VTC3-XXX	$1,646.00	Signal Level	230V	PVC	TFE	CER	Standard	**K5VTC3**	$134.00

Series MP - Electronic Metering Pumps

LMH5	MAX FLOW RATE: 3.15 gph / 76 gpd (11.9 lph) max pressure: 150 PSI (10 BAR)								
Model Number	List Price	Controls	Voltage	Head Fittings	Seats / O-Rings	Balls	Option	KOPkit #	List Price
LMH5TA-KTC3-XXX	$2,025.00	Signal Level	115V	PVDF	TFE	CER	Standard	K5KTC3	$230.00
LMH5TA-KTC3-130	$2,160.00	Signal Level	115V	PVDF	TFE	CER	PVDF Tube	K5KTC3	$230.00
LMH5TA-KTC3-500	$2,109.00	Signal Level	115V	PVDF	TFE	CER	5 Func. Valve	K5KTC3	$230.00
LMH5TA-PTC3-XXX	$1,959.00	Signal Level	115V	GFPPL	TFE	CER	Standard	K5PTC3	$134.00
LMH5TA-PTC3-500	$2,044.00	Signal Level	115V	GFPPL	TFE	CER	5 Func. Valve	K5PTC3	$134.00
LMH5TA-VTC3-XXX	$1,959.00	Signal Level	115V	PVC	TFE	CER	Standard	K5VTC3	$134.00
LMH5TA-VTC3-500	$2,044.00	Signal Level	115V	PVC	TFE	CER	5 Func. Valve	K5VTC3	$134.00
LMH5TB-VTC3-XXX	$1,986.00	Signal Level	230V	PVC	TFE	CER	Standard	K5VTC3	$134.00

LMA3	MAX FLOW RATE: 0.50 gph / 12 gpd (1.9 lph) max pressure: 100 PSI (7 BAR)								
Model Number	List Price	Controls	Voltage	Head Fittings	Seats / O-Rings	Balls	Option	KOPkit #	List Price
LMA3TA-ATSG-XXX	$1,482.00	Signal Level	115V	316 SS	TFE	316 SS	Standard	K3ATSG	$615.00
LMA3TA-PTC1-XXX	1,081.00	Signal Level	115V	GFPPL	TFE	CER	Standard	K3PTC1	$100.00
LMA3TA-PTC1-500	$1,166.00	Signal Level	115V	GFPPL	TFE	CER	Standard	K3PTC1	$100.00
LMA3T2-PTC1-CZXXX	$1,107.00	Signal Level	230V	GFPPL	TFE	CER	5 Func. Valve	K3PTC1	$100.00
LMA3TA-VTC1-XXX	$1,081.00	Signal Level	115V	PVC	TFE	CER	Standard	K3VTC1	$100.00
LMA3TA-VTC1-500	$1,166.00	Signal Level	115V	PVC	TFE	CER	Standard	K3VTC1	$100.00
LMA3TA-VTCJ-XXX	$1,081.00	Signal Level	115V	PVC	TFE	CER	Q.P./Standard	K3VTCJ	$100.00
LMA3TA-VTCJ-500	$1,166.00	Signal Level	115V	PVC	TFE	CER	Q.P./Standard	K3VTCJ	$100.00

LMK3	MAX FLOW RATE: 0.60 gph / 14 gpd (2.3 lph) max pressure: 100 PSI (7 BAR)								
Model Number	List Price	Controls	Voltage	Head Fittings	Seats / O-Rings	Balls	Option	KOPkit #	List Price
LMK3TA-KTC1-XXX	$1,146.00	Signal Level	115V	PVDF	TFE	CER	Standard	K3KTC1	$195.00
LMK3TA-KTC1-130	$1,282.00	Signal Level	115V	PVDF	TFE	CER	PVDF Tube	K3KTC1	$195.00
LMK3TA-KTC1-500	$1,231.00	Signal Level	115V	PVDF	TFE	CER	5 Func. Valve	K3KTC1	$195.00
LMK3TA-VTC1-XXX	$1,081.00	Signal Level	115V	PVC	TFE	CER	Standard	K3VTC1	$100.00
LMK3TB-VTC1-XXX	$1,107.00	Signal Level	230V	PVC	TFE	CER	Standard	K3VTC1	$100.00

LMB4	MAX FLOW RATE: 1.00 gph / 24 gpd (3.8 lph) max pressure: 100 PSI (7 BAR)								
Model Number	List Price	Controls	Voltage	Head Fittings	Seats / O-Rings	Balls	Option	KOPkit #	List Price
LMB4TA-KTC1-XXX	$1,212.00	Signal Level	115V	PVDF	TFE	CER	Standard	K4KTC1	$210.00
LMB4TA-KTC1-130	$1,347.00	Signal Level	115V	PVDF	TFE	CER	PVDF Tube	K4KTC1	$210.00
LMB4TA-KTC1-500	$1,296.00	Signal Level	115V	PVDF	TFE	CER	5 Func. Valve	K4KTC1	$210.00
LMB4T2-KTC1-CZXXX	$1,238.00	Signal Level	230V	PVDF	TFE	CER	CE Approval	K4KTC1	$210.00
LMB4TA-PTC1-XXX	$1,146.00	Signal Level	115V	GFPPL	TFE	CER	Standard	K4PTC1	$114.00
LMB4TA-PTC1-500	$1,231.00	Signal Level	115V	GFPPL	TFE	CER	5 Func. Valve	K4PTC1	$114.00
LMB4TA-VTC1-XXX	$1,146.00	Signal Level	115V	PVC	TFE	CER	Standard	K4VTC1	$114.00
LMB4TA-VTC1-500	$1,231.00	Signal Level	115V	PVC	TFE	CER	5 Func. Valve	K4VTC1	$114.00
LMB4TB-VTC1-XXX	$1,173.00	Signal Level	230V	PVC	TFE	CER	Standard	K4VTC1	$114.00

LME4	MAX FLOW RATE: 1.85 gph / 44 gpd (7.0 lph) max pressure: 100 PSI (7 BAR)								
Model Number	List Price	Controls	Voltage	Head Fittings	Seats / O-Rings	Balls	Option	KOPkit #	List Price
LME4TA-KTC1-XXX	$1,352.00	Signal Level	115V	PVDF	TFE	CER	Standard	K4KTC1	$210.00
LME4TA-KTC1-130	$1,489.00	Signal Level	115V	PVDF	TFE	CER	PVDF Tube	K4KTC1	$210.00
LME4TA-KTC1-500	$1,438.00	Signal Level	115V	PVDF	TFE	CER	5 Func. Valve	K4KTC1	$210.00
LME4TB-KTC1-XXX	$1,379.00	Signal Level	230V	PVDF	TFE	CER	Standard	K4KTC1	$210.00
LME4TA-KTC3-XXX	$1,352.00	Signal Level	115V	PVDF	TFE	CER	Standard	K4KTC3	$210.00
LME4TA-KTC3-130	$1,489.00	Signal Level	115V	PVDF	TFE	CER	PVDF Tube	K4KTC3	$210.00
LME4TA-KTC3-500	$1,438.00	Signal Level	115V	PVDF	TFE	CER	5 Func. Valve	K4KTC3	$210.00
LME4TB-KTC3-XXX	$1,379.00	Signal Level	230V	PVDF	TFE	CER	Standard	K4KTC3	$210.00
LME4TA-PTC1-XXX	$1,287.00	Signal Level	115V	GFPPL	TFE	CER	Standard	K4PTC1	$114.00
LME4TA-PTC1-500	$1,373.00	Signal Level	115V	GFPPL	TFE	CER	5 Func. Valve	K4PTC1	$114.00
LME4TB-PTC1-500	$1,399.00	Signal Level	230V	GFPPL	TFE	CER	5 Func. Valve	K4PTC1	$114.00
LME4TB-PTC1-XXX	$1,314.00	Signal Level	230V	GFPPL	TFE	CER	Standard	K4PTC1	$114.00
LME4TA-VTC1-XXX	$1,287.00	Signal Level	115V	PVC	TFE	CER	Standard	K4VTC1	$114.00
LME4TA-VTC1-500	$1,373.00	Signal Level	115V	PVC	TFE	CER	5 Func. Valve	K4VTC1	$114.00
LME4TB-VTC1-XXX	$1,314.00	Signal Level	230V	PVC	TFE	CER	Standard	K4VTC1	$114.00

Series MP - Electronic Metering Pumps

LMG5	MAX FLOW RATE: 4.00 gph / 96 gpd (15.1 lph) max pressure: 100 PSI (7 BAR)								
Model Number	List Price	Controls	Voltage	Head Fittings	Seats / O-Rings	Balls	Option	KOPkit #	List Price
LMG5TA-PTC3-XXX	$1,757.00	Signal Level	115V	GFPPL	TFE	CER	Standard	K5PTC3	$134.00
LMG5TA-VTC3-XXX	$1,757.00	Signal Level	115V	PVC	TFE	CER	Standard	K5VTC3	$134.00
LMG5TB-VTC3-XXX	$1,783.00	Signal Level	230V	PVC	TFE	CER	Standard	K5VTC3	$134.00

LMH6	MAX FLOW RATE: 5.00 gph / 120 gpd (18.9 lph) max pressure: 100 PSI (7 BAR)								
Model Number	List Price	Controls	Voltage	Head Fittings	Seats / O-Rings	Balls	Option	KOPkit #	List Price
LMH6KA-VTC3-XXX	$1,806.00	Power Level	115V	PVC	TFE	CER	Standard	K6VTC3	$139.00
LMH6KA-VTC3-500	$1,891.00	Power Level	115V	PVC	TFE	CER	5 Func. Valve	K6VTC3	$139.00
LMH6TA-ATS4-XXX	$2,030.00	Signal Level	115V	316 SS	TFE	316 SS	Standard	K6ATS4	$535.00
LMH6TA-KTC3-XXX	$1,822.00	Signal Level	115V	PVDF	TFE	CER	Standard	K6KTC3	$235.00
LMH6TA-KTC3-130	$1,957.00	Signal Level	115V	PVDF	TFE	CER	PVDF Tube	K6KTC3	$235.00
LMH6TA-KTC3-500	$1,907.00	Signal Level	115V	PVDF	TFE	CER	5 Func. Valve	K6KTC3	$235.00
LMH6TB-KTC3-500	$1,933.00	Signal Level	230V	PVDF	TFE	CER	5 Func. Valve	K6KTC3	$235.00
LMH6TB-KTC3-XXX	$1,848.00	Signal Level	230V	PVDF	TFE	CER	Standard	K6KTC3	$235.00
LMH6TA-PTC3-XXX	$1,757.00	Signal Level	115V	GFPPL	TFE	CER	Standard	K6PTC3	$139.00
LMH6TA-PTC3-500	$1,841.00	Signal Level	115V	GFPPL	TFE	CER	5 Func. Valve	K6PTC3	$139.00
LMH6TB-PTC3-XXX	$1,783.00	Signal Level	230V	GFPPL	TFE	CER	Standard	K6PTC3	$139.00
LMH6TA-VHC3-XXX	$1,744.00	Signal Level	115V	PVC	CSPE	CER	Standard	K6VHC3	$126.00
LMH6TA-VHC3-500	$1,828.00	Signal Level	115V	PVC	CSPE	CER	5 Func. Valve	K6VHC3	$126.00
LMH6TA-VTC3-XXX	$1,757.00	Signal Level	115V	PVC	TFE	CER	Standard	K6VTC3	$139.00
LMH6TA-VTC3-055	$1,757.00	Signal Level	115V	PVC	TFE	CER	Black Disc.Tube	K6VTC3	$139.00
LMH6TA-VTC3-500	$1,841.00	Signal Level	115V	PVC	TFE	CER	5 Func. Valve	K6VTC3	$139.00
LMH6TB-VTC3-XXX	$1,783.00	Signal Level	230V	PVC	TFE	CER	Standard	K6VTC3	$139.00
LMH6TA-VVC3-XXX	$1,751.00	Signal Level	115V	PVC	Viton	CER	Standard	K6VVC3	$136.00
LMH6TA-VVC3-500	$1,836.00	Signal Level	115V	PVC	Viton	CER	5 Func. Valve	K6VVC3	$136.00
LMH6TB-VVC3-XXX	$1,777.00	Signal Level	230V	PVC	Viton	CER	Standard	K6VVC3	$136.00

LMK7	MAX FLOW RATE: 8.00 gph / 192 gpd (30.3 lph) max pressure: 50 PSI (3.3 BAR)								
Model Number	List Price	Controls	Voltage	Head Fittings	Seats / O-Rings	Balls	Option	KOPkit #	List Price
LMK7TA-KTC3-XXX	$1,945.00	Signal Level	115V	PVDF	TFE	CER	Standard	K7KTC3	$246.00
LMK7TA-KTC3-130	$2,082.00	Signal Level	115V	PVDF	TFE	CER	PVDF Tube	K7KTC3	$246.00
LMK7TA-KTC3-500	$2,031.00	Signal Level	115V	PVDF	TFE	CER	5 Func. Valve	K7KTC3	$246.00
LMK7TA-PTC3-XXX	$1,880.00	Signal Level	115V	GFPPL	TFE	CER	Standard	K7PTC3	$151.00
LMK7TA-PTC3-500	$1,966.00	Signal Level	115V	GFPPL	TFE	CER	5 Func. Valve	K7PTC3	$151.00
LMK7TA-WTC3-XXX	$1,880.00	Signal Level	115V	PVC	TFE	CER	Standard	K7WTC3	$164.00
LMK7TA-WTC3-500	$1,966.00	Signal Level	115V	PVC	TFE	CER	5 Func. Valve	K7WTC3	$164.00
LMK7TB-WTC3-XXX	$1,907.00	Signal Level	230V	PVC	TFE	CER	Standard	K7WTC3	$164.00
LMK7T2-WTC3-CZXXX	$1,907.00	Signal Level	230V	PVC	TFE	CER	CE Approval	K7WTC3	$164.00

LMH7	MAX FLOW RATE: 10.0 gph / 240 gpd (37.9 lph) max pressure: 35 PSI (2.4 BAR)								
Model Number	List Price	Controls	Voltage	Head Fittings	Seats / O-Rings	Balls	Option	KOPkit #	List Price
LMH7TA-KTC3-XXX	$1,978.00	Signal Level	115V	PVDF	TFE	CER	Standard	K7KTC3	$246.00
LMH7TA-KTC3-130	$2,113.00	Signal Level	115V	PVDF	TFE	CER	PVDF Tube	K7KTC3	$246.00
LMH7TA-KTC3-500	$2,062.00	Signal Level	115V	PVDF	TFE	CER	5 Func. Valve	K7KTC3	$246.00
LMH7TB-KTC3-XXX	$2,004.00	Signal Level	230V	PVDF	TFE	CER	Standard	K7KTC3	$246.00
LMH7TA-PTC3-XXX	$1,913.00	Signal Level	115V	GFPPL	TFE	CER	Standard	K7PTC3	$151.00
LMH7TA-PTC3-500	$1,997.00	Signal Level	115V	GFPPL	TFE	CER	5 Func. Valve	K7PTC3	$151.00
LMH7TA-WTC3-XXX	$1,913.00	Signal Level	115V	PVC	TFE	CER	Standard	K7WTC3	$164.00
LMH7TA-WTC3-055	$1,913.00	Signal Level	115V	PVC	TFE	CER	Black Disc.Tube	K7WTC3	$164.00
LMH7TA-WTC3-500	$1,997.00	Signal Level	115V	PVC	TFE	CER	5 Func. Valve	K7WTC3	$164.00
LMH7TB-WTC3-500	$12,024.00	Signal Level	230V	PVC	TFE	CER	5 Func. Valve	K7WTC3	$164.00
LMH7TB-WTC3-XXX	$1,939.00	Signal Level	230V	PVC	TFE	CER	Standard	K7WTC3	$164.00

LMH8	MAX FLOW RATE: 21.0 gph / 504 gpd (79.5 lph) max pressure: 20 PSI (1.3 BAR)								
Model Number	List Price	Controls	Voltage	Head Fittings	Seats / O-Rings	Balls	Option	KOPkit #	List Price
LMH8TA-PTCB-XXX	$2,706.00	Signal Level	115V	GFPPL	TFE	CER	Standard	K8PTCB	$525.00
LMH8TA-WTCB-XXX	$2,706.00	Signal Level	115V	PVC	TFE	CER	Standard	K8WTCB	$538.00
LMH8TB-WTCB-XXX	$2,732.00	Signal Level	230V	PVC	TFE	CER	Standard	K8WTCB	$538.00

PULSAtron® Series E - Electronic Metering Pumps

- Tubing: PVDF Tube "130" and Black Tubing "055" change the suffix code from "XXX" to "130" or "055".
- Five Function Valve option change the suffix code from “XXX” to “500”.
- 230 VAC input power, change the letter “A” to the letter “B” in position six (6) of the model number.
- CE approval, Change the letter “A” to the number “2” and change the suffix code from “XXX” to “CZXXX” (EU), "CZUKXXX" (UK), or "CZSUIXXX" (CH/ LIE).
- Other options are sold separately.

LE12 — MAX FLOW RATE: 0.21 gph 5 gpd (0.8 lph) max pressure: 250 PSI (17 BAR)

Model Number	List Price	Controls	Voltage	Head Fittings	Seats / O-Rings	Balls	Options	KOPkit #	List Price
LE12SA-PTCJ-XXX	$658.00	No Options	115V	GFPPL	TFE	CER	Q.P./Standard	K2PTCJ	$98.00
LE12SA-WTCJ-XXX	$658.00	No Options	115V	PVC	TFE	CER	Q.P./Standard	K2WTCJ	$111.00

LE33 — MAX FLOW RATE: 0.50 gph / 12 gpd (1.9 lph) max pressure: 250 PSI (17 BAR)

Model Number	List Price	Controls	Voltage	Head Fittings	Seats / O-Rings	Balls	Options	KOPkit #	List Price
LE33SA-ATSG-XXX	$1,145.00	No Options	115V	316 SS	TFE	316 SS	Standard	K4ATSG	$630.00
LE33SA-KTC1-XXX	$809.00	No Options	115V	PVDF	TFE	CER	Standard	K4KTC1	$210.00
LE33SA-KTC1-130	$944.00	No Options	115V	PVDF	TFE	CER	PVDF Tube	K4KTC1	$210.00
LE33SA-KTC1-500	$893.00	No Options	115V	PVDF	TFE	CER	5 Func. Valve	K4KTC1	$210.00
LE33SA-KTCJ-XXX	$809.00	No Options	115V	PVDF	TFE	CER	Q.P./Standard	K4KTCJ	$210.00
LE33SA-PTC1-XXX	$743.00	No Options	115V	GFPPL	TFE	CER	Standard	K4PTC1	$114.00
LE33SA-PTC1-500	$828.00	No Options	115V	GFPPL	TFE	CER	5 Func. Valve	K4PTC1	$114.00
LE33SB-PTC1-XXX	$770.00	No Options	230V	GFPPL	TFE	CER	Standard	K4PTC1	$114.00

LE02 — MAX FLOW RATE: 0.25 gph / 6 gpd (0.9 lph) max pressure: 150 PSI (10 BAR)

Model Number	List Price	Controls	Voltage	Head Fittings	Seats / O-Rings	Balls	Options	KOPkit #	List Price
LE02SA-KTCJ-XXX	$615.00	No Options	115V	PVDF	TFE	CER	Q.P./Standard	K2KTCJ	$194.00
LE02SA-KTCJ-130	$751.00	No Options	115V	PVDF	TFE	CER	Q.P./PVDF Tube	K2KTCJ	$194.00
LE02SB-KTCJ-XXX	$642.00	No Options	230V	PVDF	TFE	CER	Q.P./Standard	K2KTCJ	$194.00
LE02SA-PTCJ-XXX	$550.00	No Options	115V	GFPPL	TFE	CER	Q.P./Standard	K2PTCJ	$98.00
LE02SB-PTCJ-XXX	$576.00	No Options	230V	GFPPL	TFE	CER	Q.P./Standard	K2PTCJ	$98.00
LE02SA-VTCJ-XXX	$550.00	No Options	115V	PVC	TFE	CER	Q.P./Standard	K2VTCJ	$98.00

LE13 — MAX FLOW RATE: 0.50 gph / 12 gpd (1.9 lph) max pressure: 150 PSI (10 BAR)

Model Number	List Price	Controls	Voltage	Head Fittings	Seats / O-Rings	Balls	Options	KOPkit #	List Price
LE13SA-KTC1-XXX	$688.00	No Options	115V	PVDF	TFE	CER	Standard	K3KTC1	$195.00
LE13SA-KTC1-130	$825.00	No Options	115V	PVDF	TFE	CER	PVDF Tube	K3KTC1	$195.00
LE13SA-KTC1-500	$774.00	No Options	115V	PVDF	TFE	CER	5 Func. Valve	K3KTC1	$195.00
LE13SA-PTC1-XXX	$623.00	No Options	115V	GFPPL	TFE	CER	Standard	K3PTC1	$100.00
LE13SA-PTC1-500	$709.00	No Options	115V	GFPPL	TFE	CER	5 Func. Valve	K3PTC1	$100.00
LE13SB-PTC1-XXX	$650.00	No Options	230V	GFPPL	TFE	CER	Standard	K3PTC1	$100.00
LE13SA-VHC1-XXX	$610.00	No Options	115V	PVC	CSPE	CER	Standard	K3VHC1	$86.00
LE13SA-VTC1-XXX	$623.00	No Options	115V	PVC	TFE	CER	Standard	K3VTC1	$100.00
LE13SA-VTC1-055	$623.00	No Options	115V	PVC	TFE	CER	Black Disc.Tube	K3VTC1	$100.00
LE13SA-VTC1-500	$709.00	No Options	115V	PVC	TFE	CER	5 Func. Valve	K3VTC1	$100.00
LE13SB-VTC1-XXX	$650.00	No Options	230V	PVC	TFE	CER	Standard	K3VTC1	$100.00
LE13SA-VVC9-XXX	$745.00	No Options	115V	PVC	Viton	CER	Standard	K3VVC9	$215.00

Series E - Electronic Metering Pumps

LE34	MAX FLOW RATE: 0.90 gph / 22 gpd (3.4 lph) max pressure: 150 PSI (10 BAR)								
Model Number	**List Price**	**Controls**	**Voltage**	**Head Fittings**	**Seats / O-Rings**	**Balls**	**Options**	**KOPkit #**	**List Price**
LE34SA-KTC1-XXX	$846.00	No Options	115V	PVDF	TFE	CER	Standard	**K4KTC1**	$210.00
LE34SA-KTC1-130	$982.00	No Options	115V	PVDF	TFE	CER	PPVDF Tube	**K4KTC1**	$210.00
LE34SA-KTC1-500	$931.00	No Options	115V	PVDF	TFE	CER	5 Func. Valve	**K4KTC1**	$210.00
LE34SB-KTC1-130	$1,008.00	No Options	230V	PVDF	TFE	CER	PVDF Tube	**K4KTC1**	$210.00
LE34SB-KTC1-XXX	$873.00	No Options	230V	PVDF	TFE	CER	Standard	**K4KTC1**	$210.00
LE34SA-PHC1-XXX	$767.00	No Options	115V	GFPPL	CSPE	CER	Standard	**K4PHC1**	$101.00
LE34SB-PHC1-XXX	$794.00	No Options	115V	GFPPL	CSPE	CER	Standard	**K4PHC1**	$101.00
LE34SA-PTC1-XXX	$780.00	No Options	115V	GFPPL	TFE	CER	Standard	**K4PTC1**	$114.00
LE34SA-PTC1-500	$866.00	No Options	115V	GFPPL	TFE	CER	5 Func. Valve	**K4PTC1**	$114.00
LE34SB-PTC1-XXX	$808.00	No Options	230V	GFPPL	TFE	CER	Standard	**K4PTC1**	$114.00
LE34SA-PVC1-XXX	$775.00	No Options	115V	GFPPL	Viton	CER	Standard	**K4PVC1**	$111.00
LE34SA-VHC1-XXX	$767.00	No Options	115V	PVC	CSPE	CER	Standard	**K4VHC1**	$101.00
LE34SA-VHC1-500	$852.00	No Options	115V	PVC	CSPE	CER	5 Func. Valve	**K4VHC1**	$101.00
LE34SB-VHC1-XXX	$794.00	No Options	230V	PVC	CSPE	CER	Standard	**K4VHC1**	$101.00
LE34SA-VTC1-XXX	$780.00	No Options	115V	PVC	TFE	CER	Standard	**K4VTC1**	$114.00
LE34SA-VTC1-500	$866.00	No Options	115V	PVC	TFE	CER	5 Func. Valve	**K4VTC1**	$114.00
LE34SB-VTC1-500	$892.00	No Options	230V	PVC	TFE	CER	5 Func. Valve	**K4VTC1**	$114.00
LE34SB-VTC1-XXX	$808.00	No Options	230V	PVC	TFE	CER	Standard	**K4VTC1**	$114.00
LE34SA-VVC9-XXX	$902.00	No Options	115V	PVC	Viton	CER	Degas/Standard	**K4VVC9**	$230.00
LE34SB-VVC9-XXX	$929.00	No Options	230V	PVC	Viton	CER	Degas/Standard	**K4VVC9**	$230.00

LE03	MAX FLOW RATE: 0.50 gph / 12 gpd (1.9 lph) max pressire: 100 PSI (7 BAR)								
Model Number	**List Price**	**Controls**	**Voltage**	**Head Fittings**	**Seats / O-Rings**	**Balls**	**Options**	**KOPkit #**	**List Price**
LE03SA-KTC1-XXX	$634.00	No Options	115V	PVDF	TFE	CER	Standard	**K3KTC1**	$195.00
LE03SA-KTC1-130	$771.00	No Options	115V	PVDF	TFE	CER	PVDF Tube	**K3KTC1**	$195.00
LE03SA-KTC1-500	$720.00	No Options	115V	PVDF	TFE	CER	5 Func. Valve	**K3KTC1**	$195.00
LE03SA-PTC1-XXX	$569.00	No Options	115V	GFPPL	TFE	CER	Standard	**K3PTC1**	$100.00
LE03SA-PTC1-500	$655.00	No Options	115V	GFPPL	TFE	CER	5 Func. Valve	**K3PTC1**	$100.00
LE03SB-PTC1-XXX	$596.00	No Options	230V	GFPPL	TFE	CER	Standard	**K3PTC1**	$100.00
LE03SA-VHC1-XXX	$556.00	No Options	115V	PVC	CSPE	CER	Standard	**K3VHC1**	$86.00
LE03SA-VHC1-055	$556.00	No Options	115V	PVC	CSPE	CER	Black Disc.Tube	**K3VHC1**	$86.00
LE03SA-VHC1-500	$642.00	No Options	115V	PVC	CSPE	CER	5 Func. Valve	**K3VHC1**	$86.00
LE03SB-VHC1-XXX	$583.00	No Options	230V	PVC	CSPE	CER	Standard	**K3VHC1**	$86.00
LE03SA-VTC1-XXX	$569.00	No Options	115V	PVC	TFE	CER	Standard	**K3VTC1**	$100.00
LE03SB-VTC1-XXX	$596.00	No Options	230V	PVC	TFE	CER	Standard	**K3VTC1**	$100.00
LE03SA-VVC9-XXX	$692.00	No Options	115V	PVC	Viton	CER	Standard	**K3VVC9**	$215.00

Series E - Electronic Metering Pumps

LE14	MAX FLOW RATE: 1.00 gph / 24 gpd (3.8 lph) max pressure: 100 PSI (7 BAR)								
Model Number	List Price	Controls	Voltage	Head Fittings	Seats / O-Rings	Balls	Options	KOPkit #	List Price
LE14SA-KTC1-XXX	$700.00	No Options	115V	PVDF	TFE	CER	Standard	K4KTC1	$210.00
LE14SA-KTC1-130	$836.00	No Options	115V	PVDF	TFE	CER	PVDF Tube	K4KTC1	$210.00
LE14SA-KTC1-500	$785.00	No Options	115V	PVDF	TFE	CER	5 Func. Valve	K4KTC1	$210.00
LE14SB-KTC1-XXX	$726.00	No Options	230V	PVDF	TFE	CER	Standard	K4KTC1	$210.00
LE14SA-PTC1-XXX	$634.00	No Options	115V	GFPPL	TFE	CER	Standard	K4PTC1	$114.00
LE14SA-PTC1-500	$720.00	No Options	115V	GFPPL	TFE	CER	5 Func. Valve	K4PTC1	$114.00
LE14SB-PTC1-XXX	$661.00	No Options	230V	GFPPL	TFE	CER	Standard	K4PTC1	$114.00
LE14SA-VHC1-XXX	$621.00	No Options	115V	PVC	CSPE	CER	Standard	K4VHC1	$101.00
LE14SA-VHC1-500	$707.00	No Options	115V	PVC	CSPE	CER	5 Func. Valve	K4VHC1	$101.00
LE14SB-VHC1-XXX	$648.00	No Options	230V	PVC	CSPE	CER	Standard	K4VHC1	$101.00
LE14SA-VHC9-XXX	$749.00	No Options	115V	PVC	CSPE	CER	Degas/Standard	K4VHC9	$220.00
LE14SB-VHC9-XXX	$775.00	No Options	230V	PVC	CSPE	CER	Degas/Standard	K4VHC9	$220.00
LE14SA-VTC1-XXX	$634.00	No Options	115V	PVC	TFE	CER	Standard	K4VTC1	$114.00
LE14SA-VTC1-500	$720.00	No Options	115V	PVC	TFE	CER	5 Func. Valve	K4VTC1	$114.00
LE14SB-VTC1-500	$747.00	No Options	230V	PVC	TFE	CER	5 Func. Valve	K4VTC1	$114.00
LE14SB-VTC1-XXX	$661.00	No Options	230V	PVC	TFE	CER	Standard	K4VTC1	$114.00
LE14SA-VTCA-XXX	$634.00	No Options	115V	PVC	TFE	CER	Standard	K4VTCA	$114.00
LE14SA-VTCA-500	$720.00	No Options	115V	PVC	TFE	CER	5 Func. Valve	K4VTCA	$114.00
LE14SA-VVC9-XXX	$757.00	No Options	115V	PVC	Viton	CER	Degas/Standard	K4VVC9	$230.00
LE14SA-VVC9-055	$757.00	No Options	115V	PVC	Viton	CER	Degas/Black Disc.Tube	K4VVC9	$230.00

LE44	MAX FLOW RATE: 1.85 gph / 44 gpd (7.0 lph) max pressure: 100 PSI (7 BAR)								
Model Number	List Price	Controls	Voltage	Head Fittings	Seats / O-Rings	Balls	Options	KOPkit #	List Price
LE44SA-KTC1-XXX	$881.00	No Options	115V	PVDF	TFE	CER	Standard	K4KTC1	$210.00
LE44SA-KTC1-130	$1,017.00	No Options	115V	PVDF	TFE	CER	PVDF Tube	K4KTC1	$210.00
LE44SA-KTC1-500	$966.00	No Options	115V	PVDF	TFE	CER	5 Func. Valve	K4KTC1	$210.00
LE44SB-KTC1-XXX	$907.00	No Options	230V	PVDF	TFE	CER	Standard	K4KTC1	$210.00
LE44S2-KTC1-CZXXX	$907.00	No Options	230V	PVDF	TFE	CER	CE Approval	K4KTC1	$210.00
LE44SA-KTC3-XXX	$881.00	No Options	115V	PVDF	TFE	CER	Standard	K4KTC3	$210.00
LE44SA-KTC3-130	$1,017.00	No Options	115V	PVDF	TFE	CER	PVDF Tube	K4KTC3	$210.00
LE44SA-KTC3-500	$966.00	No Options	115V	PVDF	TFE	CER	5 Func. Valve	K4KTC3	$210.00
LE44SB-KTC3-XXX	$907.00	No Options	230V	PVDF	TFE	CER	Standard	K4KTC3	$210.00
LE44SA-PTC1-XXX	$816.00	No Options	115V	GFPPL	TFE	CER	Standard	K2PTC1	$98.00
LE44SA-PTC1-500	$901.00	No Options	115V	GFPPL	TFE	CER	5 Func. Valve	K2PTC1	$98.00
LE44SB-PTC1-XXX	$842.00	No Options	230V	GFPPL	TFE	CER	Standard	K2PTC1	$98.00
LE44SA-PTC3-XXX	$816.00	No Options	115V	GFPPL	TFE	CER	Standard	K4PTC3	$114.00
LE44SB-PTC3-500	$928.00	No Options	230V	GFPPL	TFE	CER	5 Func. Valve	K4PTC3	$114.00
LE44SA-VHC1-XXX	$803.00	No Options	115V	PVC	CSPE	CER	Standard	K4VHC1	$101.00
LE44SA-VHC1-500	$888.00	No Options	115V	PVC	CSPE	CER	5 Func. Valve	K4VHC1	$101.00
LE44SB-VHC1-500	$915.00	No Options	230V	PVC	CSPE	CER	5 Func. Valve	K4VHC1	$101.00
LE44SB-VHC1-XXX	$829.00	No Options	230V	PVC	CSPE	CER	Standard	K4VHC1	$101.00
LE44SA-VHC3-XXX	$803.00	No Options	115V	PVC	CSPE	CER	Standard	K4VHC3	$101.00
LE44SA-VTC1-XXX	$816.00	No Options	115V	PVC	TFE	CER	Standard	K4VTC1	$114.00
LE44SA-VTC1-500	$901.00	No Options	115V	PVC	TFE	CER	5 Func. Valve	K4VTC1	$114.00
LE44SB-VTC1-500	$928.00	No Options	230V	PVC	TFE	CER	5 Func. Valve	K4VTC1	$114.00
LE44SB-VTC1-XXX	$842.00	No Options	230V	PVC	TFE	CER	Standard	K4VTC1	$114.00
LE44S2-VTC1-CZXXX	$842.00	No Options	230V	PVC	TFE	CER	CE Approval	K4VTC1	$114.00
LE44SA-VTC3-XXX	$816.00	No Options	115V	PVC	TFE	CER	Standard	K4VTC3	$114.00
LE44SA-VTC3-500	$901.00	No Options	115V	PVC	TFE	CER	5 Func. Valve	K4VTC3	$114.00
LE44SB-VTC3-XXX	$842.00	No Options	230V	PVC	TFE	CER	Standard	K4VTC3	$114.00
LE44SA-VVC9-XXX	$938.00	No Options	115V	PVC	Viton	CER	Degas/Standard	K4VVC9	$230.00
LE44SA-VVC9-055	$938.00	No Options	115V	PVC	Viton	CER	Degas/Black Disc.Tube	K4VVC9	$230.00
LE44SB-VVC9-XXX	$964.00	No Options	230V	PVC	Viton	CER	Degas/Standard	K4VVC9	$230.00

PULSAtron® Series A PLUS - Electronic Metering Pumps

- Tubing: PVDF Tube "130" and Black Tubing "055" change the suffix code from "XXX" to "130" or "055".
- Five Function Valve option change the suffix code from “XXX” to “500”.
- 230 VAC input power, change the letter “A” to the letter “B” in position six (6) of the model number.
- CE approval, Change the letter “A” to the number “2” and change the suffix code from “XXX” to “CZXXX” (EU), "CZUKXXX" (UK), or "CZSUIXXX" (CH/ LIE).
- Other options are sold separately.

LBC2 — MAX FLOW RATE: 0.25 gph / 6 gpd (0.9 lph) max presure: 250 PSI (17 BAR)

Model Number	List Price	Controls	Voltage	Head Fittings	Seats / O-Rings	Balls	Options	KOPkit #	List Price
LBC2EA-KTCJ-XXX	$720.00	Pace w/Auto/Man.	115V	PVDF	TFE	CER	Q.P./Standard	K2KTCJ	$194.00
LBC2SA-ATCG-XXX	$928.00	Manual Control	115V	316 SS	TFE	CER	Standard	K2ATCG	$599.00
LBC2SA-KTCJ-XXX	$605.00	Manual Control	115V	PVDF	TFE	CER	Q.P./Standard	K2KTCJ	$194.00
LBC2SA-KTCJ-130	$741.00	Manual Control	115V	PVDF	TFE	CER	Q.P./PVDF Tube	K2KTCJ	$194.00
LBC2SA-KTCJ-500	$691.00	Manual Control	115V	PVDF	TFE	CER	Q.P./5 Func. Valve	K2KTCJ	$194.00
LBC2SA-PTCJ-XXX	$540.00	Manual Control	115V	GFPPL	TFE	CER	Q.P./Standard	K2PTCJ	$98.00
LBC2SA-PTCJ-500	$625.00	Manual Control	115V	GFPPL	TFE	CER	Q.P./5 Func. Valve	K2PTCJ	$98.00
LBC2SA-WTCJ-XXX	$540.00	Manual Control	115V	PVC	TFE	CER	Q.P./Standard	K2WTCJ	$111.00
LBC2SA-WTCJ-500	$625.00	Manual Control	115V	PVC	TFE	CER	Q.P./5 Func. Valve	K2WTCJ	$111.00
LBC2S2-WTCJ-CZ500	$652.00	Manual Control	230V	PVC	TFE	CER	Q.P./CE App/5 Func Vlv	K2WTCJ	$111.00

LBC3 — MAX FLOW RATE: 0.42 gph / 10 gpd (1.6 lph) max presure: 250 PSI (17 BAR)

Model Number	List Price	Controls	Voltage	Head Fittings	Seats / O-Rings	Balls	Options	KOPkit #	List Price
LBC3SA-KTC1-XXX	$605.00	Manual Control	115V	PVDF	TFE	CER	Standard	K3KTC1	$195.00
LBC3SA-KTC1-130	$741.00	Manual Control	115V	PVDF	TFE	CER	PVDF Tube	K3KTC1	$195.00
LBC3SA-KTC1-500	$691.00	Manual Control	115V	PVDF	TFE	CER	5 Func. Valve	K3KTC1	$195.00
LBC3SA-KTCJ-XXX	$605.00	Manual Control	115V	PVDF	TFE	CER	Q.P./Standard	K3KTCJ	$195.00
LBC3SA-PTC1-XXX	$540.00	Manual Control	115V	GFPPL	TFE	CER	Standard	K3PTC1	$100.00
LBC3SA-PTC1-500	$625.00	Manual Control	115V	GFPPL	TFE	CER	5 Func. Valve	K3PTC1	$100.00
LBC3SB-PTC1-XXX	$566.00	Manual Control	230V	GFPPL	TFE	CER	Standard	K3PTC1	$100.00
LBC3SA-WTC1-XXX	$540.00	Manual Control	115V	PVC	TFE	CER	Standard	K3WTC1	$113.00
LBC3SA-WTC1-500	$625.00	Manual Control	115V	PVC	TFE	CER	5 Func. Valve	K3WTC1	$113.00
LBC3SB-WTC1-XXX	$566.00	Manual Control	230V	PVC	TFE	CER	5 Func. Valve	K3WTC1	$113.00

LBS2 — MAX FLOW RATE: 0.50 gph / 12 gpd (0.9 lph) max presure: 250 PSI (17 BAR)

Model Number	List Price	Controls	Voltage	Head Fittings	Seats / O-Rings	Balls	Options	KOPkit #	List Price
LBS2EA-WTCJ-XXX	$655.00	Pace w/Auto/Man.	115V	PVC	TFE	CER	Q.P./Standard	K2WTCJ	$111.00
LBS2SA-ATC2-XXX	$799.00	Manual Control	115V	316 SS	TFE	CER	Standard	K2ATC2	$479.00
LBS2SA-ATS2-XXX	$813.00	Manual Control	115V	316 SS	TFE	316 SS	Standard	K2ATC2	$475.00
LBS2SA-KTCJ-XXX	$605.00	Manual Control	115V	PVDF	TFE	CER	Q.P./Standard	K2KTCJ	$194.00
LBS2SA-KTCJ-130	$741.00	Manual Control	115V	PVDF	TFE	CER	Q.P./PVDF Tube	K2KTCJ	$194.00
LBS2SA-KTCJ-500	$691.00	Manual Control	115V	PVDF	TFE	CER	Q.P./5 Func. Valve	K2KTCJ	$194.00
LBS2SB-KTCJ-XXX	$631.00	Manual Control	230V	PVDF	TFE	CER	Q.P./Standard	K2KTCJ	$194.00
LBS2S2-KTCJ-CZXXX	$631.00	Manual Control	230V	PVDF	TFE	CER	Q.P./CE Approval	K2KTCJ	$194.00
LBS2SA-PTCJ-XXX	$540.00	Manual Control	115V	GFPPL	TFE	CER	Q.P./Standard	K2PTCJ	$98.00
LBS2SA-PTCJ-500	$625.00	Manual Control	115V	GFPPL	TFE	CER	Q.P./5 Func. Valve	K2PTCJ	$98.00
LBS2SB-PTCJ-XXX	$566.00	Manual Control	230V	GFPPL	TFE	CER	Q.P./Standard	K2PTCJ	$98.00
LBS2SA-VVC9-XXX (1)	$662.00	Manual Control	115V	PVC	Viton	CER	Degas/Standard	K2VVC9	$214.00
LBS2SA-WTCJ-XXX	$540.00	Manual Control	115V	PVC	TFE	CER	Q.P./Standard	K2WTCJ	$111.00
LBS2SA-WTCJ-500	$625.00	Manual Control	115V	PVC	TFE	CER	Q.P./5 Func. Valve	K2WTCJ	$111.00
LBS2SB-WTCJ-XXX	$566.00	Manual Control	230V	PVC	TFE	CER	Q.P./Standard	K2WTCJ	$111.00
LBS2XA-KTCJ-XXX	$778.00	Manual Control	115V	PVDF	TFE	CER	Q.P./Standard	K2KTCJ	$194.00
LBS2XA-PTCJ-XXX	$713.00	Manual Control	115V	GFPPL	TFE	CER	Q.P./Standard	K2PTCJ	$98.00

(1) Derated 150 PSI

Series A PLUS - Electronic Metering Pumps

LB02	MAX FLOW RATE: 0.25 gph / 6 gpd (0.9 lph) max presure: 150 PSI (10 BAR)								
Model Number	**List Price**	**Controls**	**Voltage**	**Head Fittings**	**Seats / O-Rings**	**Balls**	**Options**	**KOPkit #**	**List Price**
LB02SA-KTC1-XXX	$605.00	Manual Control	115V	PVDF	TFE	CER	Standard	**K2KTC1**	$194.00
LB02SA-KTC1-130	$741.00	Manual Control	115V	PVDF	TFE	CER	PVDF Tube	**K2KTC1**	$194.00
LB02SA-KTC1-500	$691.00	Manual Control	115V	PVDF	TFE	CER	5 Func. Valve	**K2KTC1**	$194.00
LB02SB-KTC1-XXX	$631.00	Manual Control	230V	PVDF	TFE	CER	Standard	**K2KTC1**	$194.00
LB02SB-KTC1-500	$7172.00	Manual Control	230V	PVDF	TFE	CER	5 Func. Valve	**K2KTC1**	$194.00
LB02SA-PHC1-XXX	$527.00	Manual Control	115V	GFPPL	CSPE	CER	Standard	**K2PHC1**	$84.00
LB02SA-PHC1-500	$612.00	Manual Control	115V	GFPPL	CSPE	CER	5 Func. Valve	**K2PHC1**	$84.00
LB02SB-PHC1-XXX	$553.00	Manual Control	230V	GFPPL	CSPE	CER	Standard	**K2PHC1**	$84.00
LB02S2-PHC1-CZXXX	$553.00	Manual Control	230V	GFPPL	CSPE	CER	CE Approval	**K2PHC1**	$84.00
LB02SA-PTC1-XXX	$540.00	Manual Control	115V	GFPPL	TFE	CER	Standard	**K2PTC1**	$98.00
LB02SA-PTC1-500	$625.00	Manual Control	115V	GFPPL	TFE	CER	5 Func. Valve	**K2PTC1**	$98.00
LB02SB-PTC1-XXX	$566.00	Manual Control	230V	GFPPL	TFE	CER	Standard	**K2PTC1**	$98.00
LB02SB-PTC1-500	$652.00	Manual Control	230V	GFPPL	TFE	CER	5 Func. Valve	**K2PTC1**	$98.00
LB02SA-PTC2-XXX	$540.00	Manual Control	115V	GFPPL	TFE	CER	Standard	**K2PTC2**	$98.00
LB02SA-PTCJ-XXX	$540.00	Manual Control	115V	GFPPL	TFE	CER	Q.P./Standard	**K2PTCJ**	$98.00
LB02SB-PTCJ-XXX	$566.00	Manual Control	230V	GFPPL	TFE	CER	Q.P./Standard	**K2PTCJ**	$98.00
LB02SA-PTCJ-500	$625.00	Manual Control	115V	GFPPL	TFE	CER	Q.P./5 Func. Valve	**K2PTCJ**	$98.00
LB02SA-VHC1-XXX	$527.00	Manual Control	115V	PVC	CSPE	CER	Standard	**K2VHC1**	$84.00
LB02SB-VHC1-XXX	$553.00	Manual Control	230V	PVC	CSPE	CER	Standard	**K2VHC1**	$84.00
LB02SA-VTC1-XXX	$540.00	Manual Control	115V	PVC	TFE	CER	Standard	**K2VTC1**	$98.00
LB02SA-VTC1-055	$540.00	Manual Control	115V	PVC	TFE	CER	Black Disc.Tubing	**K2VTC1**	$98.00
LB02SA-VTC1-500	$625.00	Manual Control	115V	PVC	TFE	CER	5 Func. Valve	**K2VTC1**	$98.00
LB02SB-VTC1-XXX	$566.00	Manual Control	230V	PVC	TFE	CER	Standard	**K2VTC1**	$98.00
LB02SB-VTC1-500	$652.00	Manual Control	230V	PVC	TFE	CER	5 Func. Valve	**K2VTC1**	$98.00
LB02SB-VTC1-055	$566.00	Manual Control	230V	PVC	TFE	CER	Black Disc.Tubing	**K2VTC1**	$98.00
LB02S2-VTC1-CZXXX	$566.00	Manual Control	230V	PVC	TFE	CER	CE Approval	**K2VTC1**	$98.00
LB02SA-VTC9-XXX	$667.00	Manual Control	115V	PVC	TFE	CER	Degas/Standard	**K2VTC9**	$217.00
LB02SB-VTC9-XXX	$694.00	Manual Control	230V	PVC	TFE	CER	Degas/Standard	**K2VTC9**	$217.00
LB02SA-VTCJ-XXX	$540.00	Manual Control	115V	PVC	TFE	CER	Q.P./Standard	**K2VTCJ**	$98.00
LB02SA-VTCJ-500	$625.00	Manual Control	115V	PVC	TFE	CER	Q.P./5 Func. Valve	**K2VTCJ**	$98.00
LB02SB-VTCJ-XXX	$566.00	Manual Control	230V	PVC	TFE	CER	Q.P./Standard	**K2VTCJ**	$98.00
LB02S2-VTCJ-CZXXX	$566.00	Manual Control	230V	PVC	TFE	CER	Q.P./CE Approval	**K2VTCJ**	$98.00
LB02SA-VVC9-XXX	$662.00	Manual Control	115V	PVC	Viton	CER	Degas/Standard	**K2VVC9**	$214.00
LB02SA-VVC9-055	$662.00	Manual Control	115V	PVC	Viton	CER	Degas/Black Disc.Tube	**K2VVC9**	$214.00
LB02SB-VVC9-XXX	$688.00	Manual Control	230V	PVC	Viton	CER	Degas/Standard	**K2VVC9**	$214.00
LB02SB-VVC9-055	$688.00	Manual Control	230V	PVC	Viton	CER	Degas/Black Disc.Tube	**K2VVC9**	$214.00

Series A PLUS - Electronic Metering Pumps

LB03	MAX FLOW RATE: 0.50 gph / 12 gpd (1.9 lph) max presure: 150 PSI (10 BAR)								
Model Number	**List Price**	**Controls**	**Voltage**	**Head Fittings**	**Seats / O-Rings**	**Balls**	**Options**	**KOPkit #**	**List Price**
LB03EA-KTC1-XXX	$721.00	Pace w/Auto/Man.	115V	PVDF	TFE	CER	Standard	**K3KTC1**	$195.00
LB03EA-KTC1-130	$857.00	Pace w/Auto/Man.	115V	PVDF	TFE	CER	PVDF Tube	**K3KTC1**	$195.00
LB03E2-KTC1-CZXXX	$748.00	Pace w/Auto/Man.	230V	PVDF	TFE	CER	CE Approval	**K3KTC1**	$195.00
LB03SA-ATC2-XXX	$800.00	Manual Control	115V	316 SS	TFE	CER	Standard	**K3ATC2**	$481.00
LB03SA-KTC1-XXX	$606.00	Manual Control	115V	PVDF	TFE	CER	Standard	**K3KTC1**	$195.00
LB03SA-KTC1-130	$741.00	Manual Control	115V	PVDF	TFE	CER	PVDF Tube	**K3KTC1**	$195.00
LB03SA-KTC1-500	$691.00	Manual Control	115V	PVDF	TFE	CER	5 Func. Valve	**K3KTC1**	$195.00
LB03SB-KTC1-XXX	$632.00	Manual Control	230V	PVDF	TFE	CER	Standard	**K3KTC1**	$195.00
LB03S2-KTC1-CZXXX	$632.00	Manual Control	230V	PVDF	TFE	CER	CE Approval	**K3KTC1**	$195.00
LB03SB-KTC1-130	$768.00	Manual Control	230V	PVDF	TFE	CER	PVDF Tube	**K3KTC1**	$195.00
LB03SB-KTC1-500	$717.00	Manual Control	230V	PVDF	TFE	CER	5 Func. Valve	**K3KTC1**	$195.00
LB03SA-KTCJ-XXX	$606.00	Manual Control	115V	PVDF	TFE	CER	Q.P./Standard	**K3KTCJ**	$195.00
LB03SA-KTCJ-130	$741.00	Manual Control	115V	PVDF	TFE	CER	Q.P./PVDF Tube	**K3KTCJ**	$195.00
LB03SB-KTCJ-XXX	$632.00	Manual Control	230V	PVDF	TFE	CER	Q.P./Standard	**K3KTCJ**	$195.00
LB03SA-PHC1-XXX	$528.00	Manual Control	115V	GFPPL	CSPE	CER	Standard	**K3PHC1**	$86.00
LB03SA-PHC1-500	$612.00	Manual Control	115V	GFPPL	CSPE	CER	5 Func. Valve	**K3PHC1**	$86.00
LB03SB-PHC1-XXX	$554.00	Manual Control	230V	GFPPL	CSPE	CER	Standard	**K3PHC1**	$86.00
LB03S2-PHC1-CZXXX	$554.00	Manual Control	230V	GFPPL	CSPE	CER	CE Approval	**K3PHC1**	$86.00
LB03SA-PTC1-XXX	$541.00	Manual Control	115V	GFPPL	TFE	CER	Standard	**K3PTC1**	$100.00
LB03SA-PTC1-500	$625.00	Manual Control	115V	GFPPL	TFE	CER	5 Func. Valve	**K3PTC1**	$100.00
LB03SB-PTC1-XXX	$567.00	Manual Control	230V	GFPPL	TFE	CER	Standard	**K3PTC1**	$100.00
LB03SA-PTC2-XXX	$541.00	Manual Control	115V	GFPPL	TFE	CER	Standard	**K3PTC2**	$100.00
LB03SA-PTCJ-XXX	$541.00	Manual Control	115V	GFPPL	TFE	CER	Q.P./Standard	**K3PTCJ**	$100.00
LB03SA-PTCJ-500	$625.00	Manual Control	115V	GFPPL	TFE	CER	Q.P./5 Func. Valve	**K3PTCJ**	$100.00
LB03SB-PTCJ-XXX	$567.00	Manual Control	230V	GFPPL	TFE	CER	Q.P./Standard	**K3PTCJ**	$100.00
LB03SA-VHC1-XXX	$528.00	Manual Control	115V	PVC	CSPE	CER	Standard	**K3VHC1**	$86.00
LB03SA-VHC1-055	$528.00	Manual Control	115V	PVC	CSPE	CER	Black Disc.Tubing	**K3VHC1**	$86.00
LB03SA-VHC1-500	$612.00	Manual Control	115V	PVC	CSPE	CER	5 Func. Valve	**K3VHC1**	$86.00
LB03SB-VHC1-XXX	$554.00	Manual Control	230V	PVC	CSPE	CER	Standard	**K3VHC1**	$86.00
LB03S2-VHC1-CZXXX	$554.00	Manual Control	230V	PVC	CSPE	CER	CE Approval	**K3VHC1**	$86.00
LB03SA-VHC9-XXX	$654.00	Manual Control	115V	PVC	CSPE	CER	Degas/Standard	**K3VHC9**	$205.00
LB03SB-VHC9-XXX	$680.00	Manual Control	230V	PVC	CSPE	CER	Degas/Standard	**K3VHC9**	$205.00
LB03SA-VTC1-XXX	$541.00	Manual Control	115V	PVC	TFE	CER	Standard	**K3VTC1**	$100.00
LB03SA-VTC1-055	$541.00	Manual Control	115V	PVC	TFE	CER	Black Disc.Tubing	**K3VTC1**	$100.00
LB03SA-VTC1-500	$625.00	Manual Control	115V	PVC	TFE	CER	5 Func. Valve	**K3VTC1**	$100.00
LB03SB-VTC1-500	$652.00	Manual Control	230V	PVC	TFE	CER	5 Func. Valve	**K3VTC1**	$100.00
LB03SB-VTC1-XXX	$567.00	Manual Control	230V	PVC	TFE	CER	Standard	**K3VTC1**	$100.00
LB03S2-VTC1-CZXXX	$567.00	Manual Control	230V	PVC	TFE	CER	CE Approval	**K3VTC1**	$100.00
LB03SA-VTC9-XXX	$667.00	Manual Control	115V	PVC	TFE	CER	Degas/ Standard	**K3VTC9**	$219.00
LB03SB-VTC9-XXX	$695.00	Manual Control	230V	PVC	TFE	CER	Degas/ Standard	**K3VTC9**	$219.00
LB03SA-VVC1-XXX	$535.00	Manual Control	115V	PVC	Viton	CER	Standard	**K3VVC1**	$96.00
LB03SB-VVC1-XXX	$561.00	Manual Control	230V	PVC	Viton	CER	Standard	**K3VVC1**	$96.00
LB03SA-VVC9-XXX	$662.00	Manual Control	115V	PVC	Viton	CER	Degas/Standard	**K3VVC9**	$215.00
LB03SA-VVC9-055	$662.00	Manual Control	115V	PVC	Viton	CER	Degas/Black Disc.Tube	**K3VVC9**	$215.00
LB03SB-VVC9-XXX	$688.00	Manual Control	230V	PVC	Viton	CER	Degas/Standard	**K3VVC9**	$215.00

Series A PLUS - Electronic Metering Pumps

LBS3	MAX FLOW RATE: 1.38 gph / 33 gpd (5.2 lph) max presure: 150 PSI (10 BAR)								
Model Number	List Price	Controls	Voltage	Head Fittings	Seats / O-Rings	Balls	Options	KOPkit #	List Price
LBS3SA-ATC2-XXX	$800.00	Manual Control	115V	316 SS	TFE	CER	Standard	K3ATC2	$480.00
LBS3SA-KTCJ-XXX	$606.00	Manual Control	115V	PVDF	TFE	CER	Q.P./Standard	K3KTCJ	$195.00
LBS3SA-KTCJ-130	$741.00	Manual Control	115V	PVDF	TFE	CER	Q.P./PVDF Tube	K3KTCJ	$195.00
LBS3SA-KTCJ-500	$691.00	Manual Control	115V	PVDF	TFE	CER	Q.P./5 Func. Valve	K3KTCJ	$195.00
LBS3SB-KTCJ-XXX	$632.00	Manual Control	230V	PVDF	TFE	CER	Q.P./Standard	K3KTCJ	$195.00
LBS3S2-KTCJ-CZXXX	$632.00	Manual Control	230V	PVDF	TFE	CER	Q.P./CE Approval	K3KTCJ	$195.00
LBS3SA-PHC1-XXX	$528.00	Manual Control	115V	GFPPL	CSPE	CER	Standard	K3PHC1	$86.00
LBS3SA-PHC1-500	$612.00	Manual Control	115V	GFPPL	CSPE	CER	5 Func. Valve	K3PHC1	$86.00
LBS3SA-PTC1-XXX	$541.00	Manual Control	115V	GFPPL	TFE	CER	Standard	K3PTC1	$99.00
LBS3SB-PTC1-XXX	$567.00	Manual Control	230V	GFPPL	TFE	CER	Standard	K3PTC1	$99.00
LBS3SA-PTCJ-XXX	$541.00	Manual Control	115V	GFPPL	TFE	CER	Q.P./Standard	K3PTCJ	$99.00
LBS3SA-PTCJ-500	$625.00	Manual Control	115V	GFPPL	TFE	CER	Q.P./5 Func. Valve	K3PTCJ	$99.00
LBS3SB-PTCJ-XXX	$567.00	Manual Control	230V	GFPPL	TFE	CER	Q.P./Standard	K3PTCJ	$99.00
LBS3SA-VTC1-XXX	$541.00	Manual Control	115V	PVC	TFE	CER	Standard	K3VTC1	$99.00
LBS3SB-VTC1-XXX	$567.00	Manual Control	230V	PVC	TFE	CER	Standard	K3VTC1	$99.00
LBS3SA-VTCJ-XXX	$541.00	Manual Control	115V	PVC	TFE	CER	Q.P./Standard	K3VTCJ	$99.00
LBS3SA-VTCJ-500	$625.00	Manual Control	115V	PVC	TFE	CER	Q.P./5 Func. Valve	K3VTCJ	$99.00
LBS3SB-VTCJ-500	$652.00	Manual Control	230V	PVC	TFE	CER	Q.P./5 Func. Valve	K3VTCJ	$99.00
LBS3SB-VTCJ-XXX	$567.00	Manual Control	230V	PVC	TFE	CER	Q.P./Standard	K3VTCJ	$99.00
LBS3SA-VVC9-XXX	$662.00	Manual Control	115V	PVC	Viton	CER	Degas/Standard	K3VVC9	$215.00
LBS3SA-VVC9-055	$662.00	Manual Control	115V	PVC	Viton	CER	Degas/Black Disc.Tube	K3VVC9	$215.00
LBS3XA-KTCJ-XXX	$778.00	Manual Control	115V	PVDF	TFE	CER	Q.P./Standard	K3KTCJ	$195.00

LB04	MAX FLOW RATE: 1.00 gph / 24 gpd (3.8 lph) max presure: 100 PSI (7 BAR)								
Model Number	List Price	Controls	Voltage	Head Fittings	Seats / O-Rings	Balls	Options	KOPkit #	List Price
LB04SA-KTC1-XXX	$606.00	Manual Control	115V	PVDF	TFE	CER	Standard	K4KTC1	$210.00
LB04SA-KTC1-130	$741.00	Manual Control	115V	PVDF	TFE	CER	PVDF Tube	K4KTC1	$210.00
LB04SA-KTC1-500	$691.00	Manual Control	115V	PVDF	TFE	CER	5 Func. Valve	K4KTC1	$210.00
LB04SB-KTC1-XXX	$632.00	Manual Control	230V	PVDF	TFE	CER	Standard	K4KTC1	$210.00
LB04SB-KTC1-130	$768.00	Manual Control	230V	PVDF	TFE	CER	PVDF Tube	K4KTC1	$210.00
LB04S2-KTC1-CZXXX	$632.00	Manual Control	230V	PVDF	TFE	CER	CE Approval	K4KTC1	$210.00
LB04SA-KTCJ-XXX	$606.00	Manual Control	115V	PVDF	TFE	CER	Q.P./Standard	K4KTCJ	$210.00
LB04SA-KTCJ-130	$741.00	Manual Control	115V	PVDF	TFE	CER	Q.P./PVDF Tube	K4KTCJ	$210.00
LB04SB-KTCJ-130	$768.00	Manual Control	230V	PVDF	TFE	CER	Q.P./PVDF Tube	K4KTCJ	$210.00
LB04SA-PHC1-XXX	$528.00	Manual Control	115V	GFPPL	CSPE	CER	Standard	K4PHC1	$100.00
LB04SA-PHC1-500	$612.00	Manual Control	115V	GFPPL	CSPE	CER	5 Func. Valve	K4PHC1	$100.00
LB04SB-PHC1-XXX	$554.00	Manual Control	230V	GFPPL	CSPE	CER	Standard	K4PHC1	$100.00
LB04S2-PHC1-CZXXX	$554.00	Manual Control	230V	GFPPL	CSPE	CER	CE Approval	K4PHC1	$100.00
LB04SA-PTC1-XXX	$541.00	Manual Control	115V	GFPPL	TFE	CER	Standard	K4PTC1	$114.00
LB04SB-PTC1-XXX	$567.00	Manual Control	230V	GFPPL	TFE	CER	Standard	K4PTC1	$114.00
LB04SA-PTCJ-XXX	$541.00	Manual Control	115V	GFPPL	TFE	CER	Q.P./Standard	K4PTCJ	$114.00
LB04SA-VHC1-XXX	$528.00	Manual Control	115V	PVC	CSPE	CER	Standard	K4VHC1	$100.00
LB04SA-VHC1-500	$612.00	Manual Control	115V	PVC	CSPE	CER	5 Func. Valve	K4VHC1	$100.00
LB04SB-VHC1-XXX	$554.00	Manual Control	230V	PVC	CSPE	CER	Standard	K4VHC1	$100.00
LB04SB-VHC1-500	$639.00	Manual Control	230V	PVC	CSPE	CER	5 Func. Valve	K4VHC1	$100.00
LB04SA-VHC9-XXX	$654.00	Manual Control	115V	PVC	CSPE	CER	Degas/Standard	K4VHC9	$220.00
LB04SB-VHC9-XXX	$680.00	Manual Control	230V	PVC	CSPE	CER	Degas/Standard	K4VHC9	$220.00
LB04SA-VTC1-XXX	$541.00	Manual Control	115V	PVC	TFE	CER	Standard	K4VTC1	$114.00
LB04SA-VTC1-500	$625.00	Manual Control	115V	PVC	TFE	CER	5 Func. Valve	K4VTC1	$114.00
LB04SB-VTC1-500	$652.00	Manual Control	230V	PVC	TFE	CER	5 Func. Valve	K4VTC1	$114.00
LB04SB-VTC1-XXX	$567.00	Manual Control	230V	PVC	TFE	CER	Standard	K4VTC1	$114.00
LB04S2-VTC1-CZXXX	$567.00	Manual Control	230V	PVC	TFE	CER	CE Approval	K4VTC1	$114.00
LB04SA-VTCJ-XXX	$541.00	Manual Control	115V	PVC	TFE	CER	Q.P./Standard	K4VTCJ	$114.00
LB04SA-VTCJ-500	$625.00	Manual Control	115V	PVC	TFE	CER	Q.P./5 Func. Valve	K4VTCJ	$114.00
LB04SB-VTCJ-XXX	$567.00	Manual Control	230V	PVC	TFE	CER	Q.P./Standard	K4VTCJ	$114.00
LB04SA-VVC9-XXX	$662.00	Manual Control	115V	PVC	Viton	CER	Degas/Standard	K4VVC9	$230.00
LB04SA-VVC9-055	$662.00	Manual Control	115V	PVC	Viton	CER	Degas/Black Disc.Tube	K4VVC9	$230.00
LB04SB-VVC9-XXX	$688.00	Manual Control	230V	PVC	Viton	CER	Degas/Standard	K4VVC9	$230.00

Series A PLUS - Electronic Metering Pumps

LB64	MAX FLOW RATE: 1.25 gph / 30 gpd (4.7 lph) max presure: 100 PSI (7 BAR)								
Model Number	**List Price**	**Controls**	**Voltage**	**Head Fittings**	**Seats / O-Rings**	**Balls**	**Options**	**KOPkit #**	**List Price**
LB64EA-VHC1-XXX	$642.00	Pace w/Auto/Man.	115V	PVC	CSPE	CER	Standard	**K4VHC1**	$100.00
LB64EB-VHC1-XXX	$668.00	Pace w/Auto/Man.	230V	PVC	CSPE	CER	Standard	**K4VHC1**	$100.00
LB64E2-VHC1-CZ500	$754.00	Pace w/Auto/Man.	230V	PVC	CSPE	CER	CE Appr/ 5 Func. Vlv	**K4VHC1**	$100.00
LB64E2-VHC1-CZXXX	$668.00	Pace w/Auto/Man.	230V	PVC	CSPE	CER	CE Approval	**K4VHC1**	$100.00
LB64SA-KTC1-XXX	$606.00	Manual Control	115V	PVDF	TFE	CER	Standard	**K4KTC1**	$210.00
LB64SA-KTC1-130	$741.00	Manual Control	115V	PVDF	TFE	CER	PVDF Tube	**K4KTC1**	$210.00
LB64SA-KTC1-500	$691.00	Manual Control	115V	PVDF	TFE	CER	5 Func. Valve	**K4KTC1**	$210.00
LB64SB-KTC1-XXX	$632.00	Manual Control	230V	PVDF	TFE	CER	Standard	**K4KTC1**	$210.010
LB64SB-KTC1-130	$768.00	Manual Control	230V	PVDF	TFE	CER	PVDF Tube	**K4KTC1**	$210.00
LB64S2-KTC1-CZXXX	$632.00	Manual Control	230V	PVDF	TFE	CER	CE Approval	**K4KTC1**	$210.00
LB64SA-PHC1-XXX	$528.00	Manual Control	115V	GFPPL	CSPE	CER	Standard	**K4PHC1**	$100.00
LB64SA-PHC1-500	$612.00	Manual Control	115V	GFPPL	CSPE	CER	5 Func. Valve	**K4PHC1**	$100.00
LB64SB-PHC1-500	$639.00	Manual Control	230V	GFPPL	CSPE	CER	5 Func. Valve	**K4PHC1**	$100.00
LB64SB-PHC1-XXX	$554.00	Manual Control	230V	GFPPL	CSPE	CER	Standard	**K4PHC1**	$100.00
LB64S2-PHC1-CZXXX	$554.00	Manual Control	230V	GFPPL	CSPE	CER	CE Approval	**K4PHC1**	$100.00
LB64SA-PTC1-XXX	$541.00	Manual Control	115V	GFPPL	TFE	CER	Standard	**K4PTC1**	$114.00
LB64SA-PTC1-500	$625.00	Manual Control	115V	GFPPL	TFE	CER	5 Func. Valve	**K4PTC1**	$114.00
LB64SB-PTC1-XXX	$567.00	Manual Control	230V	GFPPL	TFE	CER	Standard	**K4PTC1**	$114.00
LB64SA-VHC1-XXX	$528.00	Manual Control	115V	PVC	CSPE	CER	Standard	**K4VHC1**	$100.00
LB64SA-VHC1-055	$528.00	Manual Control	115V	PVC	CSPE	CER	Black Disc. Tubing	**K4VHC1**	$100.00
LB64SA-VHC1-500	$612.00	Manual Control	115V	PVC	CSPE	CER	5 Func. Valve	**K4VHC1**	$100.00
LB64SB-VHC1-XXX	$554.00	Manual Control	230V	PVC	CSPE	CER	Standard	**K4VHC1**	$100.00
LB64S2-VHC1-CZXXX	$554.00	Manual Control	230V	PVC	CSPE	CER	CE Approval	**K4VHC1**	$100.00
LB64SB-VHC1-500	$639.00	Manual Control	230V	PVC	CSPE	CER	5 Func. Valve	**K4VHC1**	$100.00
LB64SA-VHC9-XXX	$654.00	Manual Control	115V	PVC	CSPE	CER	Degas/Standard	**K4VHC9**	$220.00
LB64SA-VHC9-055	$654.00	Manual Control	115V	PVC	CSPE	CER	Degas/Black Disc.Tube	**K4VHC9**	$220.00
LB64SA-VTC1-XXX	$541.00	Manual Control	115V	PVC	TFE	CER	Standard	**K4VTC1**	$114.00
LB64SA-VTC1-500	$625.00	Manual Control	115V	PVC	TFE	CER	5 Func. Valve	**K4VTC1**	$114.00
LB64SB-VTC1-500	$652.00	Manual Control	230V	PVC	TFE	CER	5 Func. Valve	**K4VTC1**	$114.00
LB64SB-VTC1-XXX	$567.00	Manual Control	230V	PVC	TFE	CER	Standard	**K4VTC1**	$114.00
LB64SA-VTC9-XXX	$667.00	Manual Control	115V	PVC	TFE	CER	Degas/Standard	**K4VTC9**	$233.00
LB64SB-VTC9-XXX	$695.00	Manual Control	230V	PVC	TFE	CER	Degas/Standard	**K4VTC9**	$233.00
LB64SA-VVC1-XXX	$535.00	Manual Control	115V	PVC	Viton	CER	Standard	**K4VVC1**	$110.00
LB64SA-VVC1-055	$535.00	Manual Control	115V	PVC	Viton	CER	Black Disc. Tubing	**K4VVC1**	$110.00
LB64SB-VVC1-XXX	$561.00	Manual Control	230V	PVC	Viton	CER	Standard	**K4VVC1**	$110.00
LB64SA-VVC9-XXX	$662.00	Manual Control	115V	PVC	Viton	CER	Degas/Standard	**K4VVC9**	$230.00
LB64SA-VVC9-055	$662.00	Manual Control	115V	PVC	Viton	CER	Degas/Black Disc.Tube	**K4VVC9**	$230.00
LB64SB-VVC9-XXX	$688.00	Manual Control	230V	PVC	Viton	CER	Degas/Standard	**K4VVC9**	$230.00

LBS4	MAX FLOW RATE: 2.42 gph / 58 gpd (9.1 lph) max presure: 100 PSI (7 BAR)								
Model Number	**List Price**	**Controls**	**Voltage**	**Head Fittings**	**Seats / O-Rings**	**Balls**	**Options**	**KOPkit #**	**List Price**
LBS4EA-PTC1-XXX	$655.00	Pace w/Auto/Man.	115V	GFPPL	TFE	CER	Standard	**K4PTC1**	$114.00
LBS4SA-KTC1-XXX	$606.00	Manual Control	115V	PVDF	TFE	CER	Standard	**K4KTC1**	$210.00
LBS4SA-KTC1-130	$741.00	Manual Control	115V	PVDF	TFE	CER	PVDF Tube	**K4KTC1**	$210.00
LBS4S2-KTC1-CZXXX	$632.00	Manual Control	230V	PVDF	TFE	CER	CE Approval	**K4KTC1**	$210.00
LBS4SA-PHC1-XXX	$528.00	Manual Control	115V	GFPPL	CSPE	CER	Standard	**K4PHC1**	$100.00
LBS4SB-PHC1-XXX	$554.00	Manual Control	230V	GFPPL	CSPE	CER	Standard	**K4PHC1**	$100.00
LBS4SA-PTC1-XXX	$541.00	Manual Control	115V	GFPPL	TFE	CER	Standard	**K4PTC1**	$109.30
LBS4SA-PTC1-500	$625.00	Manual Control	115V	GFPPL	TFE	CER	5 Func. Valve	**K4PTC1**	$114.00
LBS4SB-PTC1-XXX	$567.00	Manual Control	230V	GFPPL	TFE	CER	Standard	**K4PTC1**	$114.00
LBS4SA-PTCA-XXX	$541.00	Manual Control	115V	GFPPL	TFE	CER	Standard	**K4PTCA**	$114.00
LBS4SB-PTCA-XXX	$567.00	Manual Control	230V	GFPPL	TFE	CER	Standard	**K4PTCA**	$114.00
LBS4SA-VTC1-XXX	$541.00	Manual Control	115V	PVC	TFE	CER	Standard	**K4VTC1**	$114.00
LBS4SB-VTC1-XXX	$567.00	Manual Control	230V	PVC	TFE	CER	Standard	**K4VTC1**	$114.00
LBS4SA-VTCA-XXX	$541.00	Manual Control	115V	PVC	TFE	CER	Standard	**K4VTCA**	$114.00
LBS4SB-VTCA-XXX	$567.00	Manual Control	230V	PVC	TFE	CER	Standard	**K4VTCA**	$114.00
LBS4SA-VVC1-XXX	$535.00	Manual Control	115V	PVC	Viton	CER	Standard	**K4VVC1**	$110.00
LBS4SA-VVC9-XXX	$662.00	Manual Control	115V	PVC	Viton	CER	Degas/Standard	**K4VVC9**	$230.00
LBS4SA-VVC9-055	$662.00	Manual Control	115V	PVC	Viton	CER	Degas/Black Disc.Tube	**K4VVC9**	$230.00
LBS4SB-VVC9-XXX	$688.00	Manual Control	230V	PVC	Viton	CER	Degas/Standard	**K4VVC9**	$230.00

Series A PLUS - Electronic Metering Pumps

LBC4	MAX FLOW RATE: 2.00 gph / 48 gpd (7.6 lph) max presure: 50 PSI (3.3 BAR)								
Model Number	**List Price**	**Controls**	**Voltage**	**Head Fittings**	**Seats / O-Rings**	**Balls**	**Options**	**KOPkit #**	**List Price**
LBC4SA-KTC3-XXX	$606.00	Manual Control	115V	PVDF	TFE	CER	Standard	**K4KTC3**	$210.00
LBC4SA-KTC3-130	$741.00	Manual Control	115V	PVDF	TFE	CER	PVDF Tube	**K4KTC3**	$210.00
LBC4SA-KTC3-500	$691.00	Manual Control	115V	PVDF	TFE	CER	5 Func. Valve	**K4KTC3**	$210.00
LBC4SB-KTC3-500	$717.00	Manual Control	230V	PVDF	TFE	CER	5 Func. Valve	**K4KTC3**	$210.00
LBC4SB-KTC3-XXX	$632.00	Manual Control	230V	PVDF	TFE	CER	Standard	**K4KTC3**	$210.00
LBC4SB-KTC3-130	$768.00	Manual Control	230V	PVDF	TFE	CER	PVDF Tube	**K4KTC3**	$210.00
LBC4SA-PTC3-XXX	$541.00	Manual Control	115V	GFPPL	TFE	CER	Standard	**K4PTC3**	$114.00
LBC4SA-PTC3-500	$625.00	Manual Control	115V	GFPPL	TFE	CER	5 Func. Valve	**K4PTC3**	$114.00
LBC4SB-PTC3-XXX	$567.00	Manual Control	230V	GFPPL	TFE	CER	Standard	**K4PTC3**	$114.00
LBC4SA-VHC3-XXX	$528.00	Manual Control	115V	PVC	CSPE	CER	Standard	**K4VHC3**	$100.00
LBC4SA-VHC3-500	$612.00	Manual Control	115V	PVC	CSPE	CER	5 Func. Valve	**K4VHC3**	$100.00
LBC4SA-VTC3-XXX	$541.00	Manual Control	115V	PVC	TFE	CER	Standard	**K4VTC3**	$114.00
LBC4SA-VTC3-500	$625.00	Manual Control	115V	PVC	TFE	CER	5 Func. Valve	**K4VTC3**	$114.00
LBC4SB-VTC3-XXX	$567.00	Manual Control	230V	PVC	TFE	CER	Standard	**K4VTC3**	$114.00

PULSAtron® Series C PLUS - Electronic Metering Pumps

- Tubing: PVDF Tube "130" and Black Tubing "055" change the suffix code from "XXX" to "130" or "055".
- Five Function Valve option change the suffix code from “XXX” to “500”.
- 230 VAC input power, change the letter “A” to the letter “B” in position six (6) of the model number.
- CE approval, Change the letter “A” to the number “2” and change the suffix code from “XXX” to “CZXXX” (EU), "CZUKXXX" (UK), or "CZSUIXXX" (CH/ LIE).
- Other options are sold separately.

LD02 — MAX FLOW RATE: 0.25 gph / 6 gpd (0.9 lph) max presure: 80 PSI (5.6 BAR)

Model Number	List Price	Controls	Voltage	Head Fittings	Seats / O-Rings	Balls	Options	KOPkit #	List Price
LD02EA-VHC1-XXX	$598.00	Pace w/Auto/Man.	115V	PVC	CSPE	CER	Standard	**K2VHC1**	$84.00
LD02EB-VHC1-XXX	$624.00	Pace w/Auto/Man.	230V	PVC	CSPE	CER	Standard	**K2VHC1**	$84.00
LD02EA-VTC1-XXX	$611.00	Pace w/Auto/Man.	115V	PVC	TFE	CER	Standard	**K2VTC1**	$98.00
LD02SA-KTC1-XXX	$561.00	Manual	115V	PVDF	TFE	CER	Standard	**K2KTC1**	$194.00
LD02SA-KTC1-130	$699.00	Manual	115V	PVDF	TFE	CER	PVDF Tube	**K2KTC1**	$194.00
LD02SA-KTC1-500	$648.00	Manual	115V	PVDF	TFE	CER	5 Func. Valve	**K2KTC1**	$194.00
LD02S2-KTC1-CZXXX	$588.00	Manual	230V	PVDF	TFE	CER	CE Approval	**K2KTC1**	$194.00
LD02SA-KTCJ-XXX	$561.00	Manual	115V	PVDF	TFE	CER	Q.P./Standard	**K2KTCJ**	$194.00
LD02SA-PTC1-XXX	$496.00	Manual	115V	GFPPL	TFE	CER	Standard	**K2PTC1**	$98.00
LD02SA-PTC1-500	$583.00	Manual	115V	GFPPL	TFE	CER	5 Func. Valve	**K2PTC1**	$98.00
LD02SB-PTC1-500	$609.00	Manual	230V	GFPPL	TFE	CER	5 Func. Valve	**K2PTC1**	$98.00
LD02SB-PTC1-XXX	$522.00	Manual	230V	GFPPL	TFE	CER	Standard	**K2PTC1**	$98.00
LD02S2-PTC1-CZXXX	$522.00	Manual	230V	GFPPL	TFE	CER	CE Approval	**K2PTC1**	$98.00
LD02SA-VHC1-XXX	$483.00	Manual	115V	PVC	CSPE	CER	Standard	**K2VHC1**	$84.00
LD02SA-VHC1-055	$483.00	Manual	115V	PVC	CSPE	CER	Blk Disc. Tube	**K2VHC1**	$84.00
LD02SA-VHC1-500	$569.00	Manual	115V	PVC	CSPE	CER	5 Func. Valve	**K2VHC1**	$84.00
LD02SB-VHC1-500	$596.00	Manual	230V	PVC	CSPE	CER	5 Func. Valve	**K2VHC1**	$84.00
LD02SB-VHC1-XXX	$509.00	Manual	230V	PVC	CSPE	CER	Standard	**K2VHC1**	$84.00
LD02SA-VTC1-XXX	$496.00	Manual	115V	PVC	TFE	CER	Standard	**K2VTC1**	$98.00
LD02SA-VTC1-055	$496.00	Manual	115V	PVC	TFE	CER	Blk Disc. Tube	**K2VTC1**	$98.00
LD02SA-VTC1-500	$583.00	Manual	115V	PVC	TFE	CER	5 Func. Valve	**K2VTC1**	$98.00
LD02SB-VTC1-500	$609.00	Manual	230V	PVC	TFE	CER	5 Func. Valve	**K2VTC1**	$98.00
LD02SB-VTC1-XXX	$522.00	Manual	230V	PVC	TFE	CER	Standard	**K2VTC1**	$98.00
LD02SA-VTCJ-XXX	$496.00	Manual	115V	PVC	TFE	CER	Q.P./Standard	**K2VTCJ**	$98.00
LD02SB-VTCJ-XXX	$522.00	Manual	230V	PVC	TFE	CER	Q.P./Standard	**K2VTCJ**	$98.00

LD03 — MAX FLOW RATE: 0.50 gph / 12 gpd (1.9 lph) max presure: 80 PSI (5.6 BAR)

Model Number	List Price	Controls	Voltage	Head Fittings	Seats / O-Rings	Balls	Options	KOPkit #	List Price
LD03SA-KTC1-XXX	$561.00	Manual	115V	PVDF	TFE	CER	Standard	**K3KTC1**	$195.00
LD03SA-KTC1-130	$699.00	Manual	115V	PVDF	TFE	CER	PVDF Tube	**K3KTC1**	$195.00
LD03SA-KTC1-500	$648.00	Manual	115V	PVDF	TFE	CER	5 Func. Valve	**K3KTC1**	$195.00
LD03SB-KTC1-500	$674.00	Manual	230V	PVDF	TFE	CER	5 Func. Valve	**K3KTC1**	$195.00
LD03SB-KTC1-XXX	$588.00	Manual	230V	PVDF	TFE	CER	Standard	**K3KTC1**	$195.00
LD03SB-KTC1-130	$725.00	Manual	230V	PVDF	TFE	CER	PVDF Tube	**K3KTC1**	$195.00
LD03SA-PHC1-XXX	$483.00	Manual	115V	GFPPL	CSPE	CER	Standard	**K3PHC1**	$86.00
LD03SA-PHC1-500	$569.00	Manual	115V	GFPPL	CSPE	CER	5 Func. Valve	**K3PHC1**	$86.00
LD03SB-PHC1-XXX	$509.00	Manual	230V	GFPPL	CSPE	CER	Standard	**K3PHC1**	$86.00
LD03SA-PTC1-XXX	$496.00	Manual	115V	GFPPL	TFE	CER	Standard	**K3PTC1**	$99.00
LD03SA-PTC1-500	$583.00	Manual	115V	GFPPL	TFE	CER	5 Func. Valve	**K3PTC1**	$99.00
LD03SB-PTC1-500	$609.00	Manual	230V	GFPPL	TFE	CER	5 Func. Valve	**K3PTC1**	$99.00
LD03SB-PTC1-XXX	$522.00	Manual	230V	GFPPL	TFE	CER	Standard	**K3PTC1**	$99.00
LD03SA-PTCJ-XXX	$496.00	Manual	115V	GFPPL	TFE	CER	Q.P./Standard	**K3PTCJ**	$99.00
LD03SA-VHC1-XXX	$483.00	Manual	115V	PVC	CSPE	CER	Standard	**K3VHC1**	$86.00
LD03SA-VHC1-055	$483.00	Manual	115V	PVC	CSPE	CER	Blk Disc. Tube	**K3VHC1**	$86.00
LD03SB-VHC1-XXX	$509.00	Manual	230V	PVC	CSPE	CER	Standard	**K3VHC1**	$86.00
LD03SB-VHC1-055	$509.00	Manual	230V	PVC	CSPE	CER	Blk Disc. Tube	**K3VHC1**	$86.00
LD03SA-VTC1-XXX	$496.00	Manual	115V	PVC	TFE	CER	Standard	**K3VTC1**	$99.00
LD03SA-VTC1-055	$496.00	Manual	115V	PVC	TFE	CER	Blk Disc. Tube	**K3VTC1**	$99.00
LD03SA-VTC1-500	$583.00	Manual	115V	PVC	TFE	CER	5 Func. Valve	**K3VTC1**	$99.00
LD03S2-VTC1-CZXXX	$522.00	Manual	230V	PVC	TFE	CER	CE Approval	**K3VTC1**	$99.00
LD03SA-VVC1-XXX	$491.00	Manual	115V	PVC	Viton	CER	Standard	**K3VVC1**	$96.00
LD03SA-VVC9-XXX	$617.00	Manual	115V	PVC	Viton	CER	Degas/Standard	**K3VVC9**	$215.00
LD03SA-VVC9-055	$617.00	Manual	115V	PVC	Viton	CER	Degas/Blk Disc Tube	**K3VVC9**	$215.00

Series C PLUS - Electronic Metering Pumps

LD04	MAX FLOW RATE: 1.00 gph / 24 gpd (3.8 lph) max presure: 80 PSI (5.6 BAR)								
Model Number	**List Price**	**Controls**	**Voltage**	**Head Fittings**	**Seats / O-Rings**	**Balls**	**Options**	**KOPkit #**	**List Price**
LD04EA-VHC1-XXX	$598.00	Pace w/Auto/Man.	115V	PVC	CSPE	CER	Standard	**K4VHC1**	$100.00
LD04EA-VHC1-500	$684.00	Pace w/Auto/Man.	115V	PVC	CSPE	CER	5 Func. Valve	**K4VHC1**	$100.00
LD04SA-KTC1-XXX	$562.00	Manual	115V	PVDF	TFE	CER	Standard	**K4KTC1**	$210.00
LD04SA-KTC1-130	$699.00	Manual	115V	PVDF	TFE	CER	PVDF Tube	**K4KTC1**	$210.00
LD04SA-KTC1-500	$648.00	Manual	115V	PVDF	TFE	CER	5 Func. Valve	**K4KTC1**	$210.00
LD04SB-KTC1-130	$725.00	Manual	230V	PVDF	TFE	CER	PVDF Tube	**K4KTC1**	$210.00
LD04SB-KTC1-500	$674.00	Manual	230V	PVDF	TFE	CER	5 Func. Valve	**K4KTC1**	$210.00
LD04SB-KTC1-XXX	$588.00	Manual	230V	PVDF	TFE	CER	Standard	**K4KTC1**	$210.00
LD04SA-PTC1-XXX	$496.00	Manual	115V	GFPPL	TFE	CER	Standard	**K4PTC1**	$114.00
LD04SA-PTC1-500	$583.00	Manual	115V	GFPPL	TFE	CER	5 Func. Valve	**K4PTC1**	$114.00
LD04SB-PTC1-XXX	$522.00	Manual	230V	GFPPL	TFE	CER	Standard	**K4PTC1**	$114.00
LD04S2-PTC1-CZXXX	$522.00	Manual	230V	GFPPL	TFE	CER	CE Approval	**K4PTC1**	$114.00
LD04SA-VHC1-XXX	$483.00	Controls	115V	PVC	CSPE	CER	Standard	**K4VHC1**	$100.00
LD04SA-VHC1-500	$569.00	Controls	115V	PVC	CSPE	CER	5 Func. Valve	**K4VHC1**	$100.00
LD04SB-VHC1-500	$596.00	Controls	230V	PVC	CSPE	CER	5 Func. Valve	**K4VHC1**	$100.00
LD04SB-VHC1-XXX	$509.00	Controls	230V	PVC	CSPE	CER	Standard	**K4VHC1**	$100.00
LD04SB-VHC1-055	$509.00	Controls	230V	PVC	CSPE	CER	Blk Disc. Tube	**K4VHC1**	$100.00
LD04SA-VTC1-XXX	$496.00	Manual	115V	PVC	TFE	CER	Standard	**K4VTC1**	$114.00
LD04SA-VTC1-500	$583.00	Manual	115V	PVC	TFE	CER	5 Func. Valve	**K4VTC1**	$114.00
LD04SB-VTC1-XXX	$522.00	Manual	230V	PVC	TFE	CER	Standard	**K4VTC1**	$114.00
LD04SA-VVC1-XXX	$491.00	Manual	115V	PVC	Viton	CER	Standard	**K4VVC1**	$110.00
LD04SA-VVC9-XXX	$617.00	Manual	115V	PVC	Viton	CER	Degas/Standard	**K4VVC9**	$230.00
LD04SA-VVC9-055	$617.00	Manual	115V	PVC	Viton	CER	Degas/Blk Disc Tube	**K4VVC9**	$230.00

LD54	MAX FLOW RATE: 1.25 gph / 30 gpd (4.7 lph) max presure: 80 PSI (5.6 BAR)								
Model Number	**List Price**	**Controls**	**Voltage**	**Head Fittings**	**Seats / O-Rings**	**Balls**	**Options**	**KOPkit #**	**List Price**
LD54EA-VTC1-XXX	$611.00	Pace w/Auto/Man.	115V	PVC	TFE	CER	Standard	**K4VTC1**	$114.00
LD54EB-VTC1-XXX	$638.00	Pace w/Auto/Man.	230V	PVC	TFE	CER	Standard	**K4VTC1**	$114.00
LD54E2-VTC1-CZXXX	$638.00	Pace w/Auto/Man.	230V	PVC	TFE	CER	CE Approval	**K4VTC1**	$114.00
LD54EA-VVC9-XXX	$732.00	Pace w/Auto/Man.	115V	PVC	Viton	CER	Degas/Standard	**K4VVC9**	$230.00
LD54SA-KTC1-XXX	$561.00	Manual	115V	PVDF	TFE	CER	Standard	**K4KTC1**	$210.00
LD54SA-KTC1-130	$699.00	Manual	115V	PVDF	TFE	CER	PVDF Tube	**K4KTC1**	$210.00
LD54SB-KTC1-XXX	$588.00	Manual	230V	PVDF	TFE	CER	Standard	**K4KTC1**	$210.00
LD54SB-KTC1-130	$725.00	Manual	230V	PVDF	TFE	CER	PVDF Tube	**K4KTC1**	$210.00
LD54S2-KTC1-CZXXX	$588.00	Manual	230V	PVDF	TFE	CER	CE Approval	**K4KTC1**	$210.00
LD54SA-KTC2-XXX	$561.00	Manual	115V	PVDF	TFE	CER	Standard	**K4KTC2**	$210.00
LD54SA-PHC1-XXX	$483.00	Manual	115V	GFPPL	CSPE	CER	Standard	**K4PHC1**	$100.00
LD54SA-PHC1-500	$569.00	Manual	115V	GFPPL	CSPE	CER	5 Func. Valve	**K4PHC1**	$100.00
LD54SB-PHC1-XXX	$509.00	Manual	230V	GFPPL	CSPE	CER	Standard	**K4PHC1**	$100.00
LD54SA-PTC1-XXX	$496.00	Manual	115V	GFPPL	TFE	CER	Standard	**K4PTC1**	$114.00
LD54SA-PTC1-500	$583.00	Manual	115V	GFPPL	TFE	CER	5 Func. Valve	**K4PTC1**	$114.00
LD54SB-PTC1-XXX	$522.00	Manual	230V	GFPPL	TFE	CER	Standard	**K4PTC1**	$114.00
LD54S2-PTC1-CZXXX	$522.00	Manual	230V	GFPPL	TFE	CER	CE Approval	**K4PTC1**	$114.00
LD54SA-VHC1-XXX	$483.00	Manual	115V	PVC	CSPE	CER	Standard	**K4VHC1**	$100.00
LD54SA-VHC1-055	$483.00	Manual	115V	PVC	CSPE	CER	Blk Disc. Tube	**K4VHC1**	$100.00
LD54SA-VHC1-500	$569.00	Manual	115V	PVC	CSPE	CER	5 Func. Valve	**K4VHC1**	$100.00
LD54SB-VHC1-XXX	$509.00	Manual	230V	PVC	CSPE	CER	Standard	**K4VHC1**	$100.00
LD54SB-VHC1-055	$509.00	Manual	230V	PVC	CSPE	CER	Blk Disc. Tube	**K4VHC1**	$100.00
LD54SA-VTC1-XXX	$496.00	Manual	115V	PVC	TFE	CER	Standard	**K4VTC1**	$114.00
LD54SA-VTC1-500	$583.00	Manual	115V	PVC	TFE	CER	5 Func. Valve	**K4VTC1**	$114.00
LD54SB-VTC1-XXX	$522.00	Manual	230V	PVC	TFE	CER	Standard	**K4VTC1**	$114.00
LD54S2-VTC1-CZXXX	$522.00	Manual	230V	PVC	TFE	CER	CE Approval	**K4VTC1**	$114.00
LD54SA-VVC9-XXX	$617.00	Manual	115V	PVC	Viton	CER	Degas/Standard	**K4VVC9**	$230.00
LD54SA-VVC9-055	$617.00	Manual	115V	PVC	Viton	CER	Degas/Blk Disc Tube	**K4VVC9**	$230.00
LD54SB-VVC9-XXX	$645.00	Manual	230V	PVC	Viton	CER	Degas/Standard	**K4VVC9**	$230.00

PULSAtron® Series C - Electronic Metering Pumps

- Tubing: PVDF Tube "130" and Black Tubing "055" change the suffix code from "XXX" to "130" or "055".
- Five Function Valve option change the suffix code from “XXX” to “500”.
- 230 VAC input power, change the letter “A” to the letter “B” in position six (6) of the model number.
- CE approval, Change the letter “A” to the number “2” and change the suffix code from “XXX” to “CZXXX” (EU), "CZUKXXX" (UK), or "CZSUIXXX" (CH/ LIE).
- Other options are sold separately.

LC02	MAX FLOW RATE: 0.25 gph / 6 gpd (0.9 lph) max pressure: 80 PSI (5.6 BAR)								
Model Number	**List Price**	**Controls**	**Voltage**	**Head Fittings**	**Seats / O-Rings**	**Balls**	**Options**	**KOPkit #**	**List Price**
LC02SA-KTC1-XXX	$508.00	Manual	115V	PVDF	TFE	CER	Standard	**K2KTC1**	$194.00
LC02SA-KTC1-130	$646.00	Manual	115V	PVDF	TFE	CER	PVDF Tube	**K2KTC1**	$194.00
LC02SB-KTC1-XXX	$539.00	Manual	230V	PVDF	TFE	CER	Standard	**K2KTC1**	$194.00
LC02SA-PTC1-XXX	$443.00	Manual	115V	GFPPL	TFE	CER	Standard	**K2PTC1**	$98.00
LC02SB-PTC1-XXX	$470.00	Manual	230V	GFPPL	TFE	CER	Standard	**K2PTC1**	$98.00
LC02SA-VHC1-XXX	$430.00	Manual	115V	PVC	CSPE	CER	Standard	**K2VHC1**	$84.00
LC02SA-VHC1-055	$430.00	Manual	115V	PVC	CSPE	CER	Blk Disc. Tube	**K2VHC1**	$84.00
LC02SB-VHC1-XXX	$456.00	Manual	230V	PVC	CSPE	CER	Standard	**K2VHC1**	$84.00
LC02SA-VTC1-XXX	$443.00	Manual	115V	PVC	TFE	CER	Standard	**K2VTC1**	$98.00
LC02SA-VTC1-500	$530.00	Manual	115V	PVC	TFE	CER	5 Func. Valve	**K2VTC1**	$98.00
LC02SB-VTC1-500	$556.00	Manual	230V	PVC	TFE	CER	6 Func. Valve	**K2VTC1**	$98.00
LC02SB-VTC1-XXX	$470.00	Manual	230V	PVC	TFE	CER	Standard	**K2VTC1**	$98.00
LC02SA-VTCJ-XXX	$443.00	Manual	115V	PVC	TFE	CER	Q.P./Standard	**K2VTCJ**	$98.00
LC02SB-VTCJ-XXX	$470.00	Manual	230V	PVC	TFE	CER	Q.P./Standard	**K2VTCJ**	$98.00
LC02SA-VVC1-XXX	$438.00	Manual	115V	PVC	Viton	CER	Standard	**K2VVC1**	$94.00
LC02SA-VVC1-055	$438.00	Manual	115V	PVC	Viton	CER	Blk Disc. Tube	**K2VVC1**	$94.00
LC02SB-VVC1-XXX	$464.00	Manual	230V	PVC	Viton	CER	Standard	**K2VVC1**	$94.00

LC03	MAX FLOW RATE:0.50 gph / 12 gpd (1.9 lph) max pressure: 80 PSI (5.6 BAR)								
Model Number	**List Price**	**Controls**	**Voltage**	**Head Fittings**	**Seats / O-Rings**	**Balls**	**Options**	**KOPkit #**	**List Price**
LC03SA-KTC1-XXX	$508.00	Manual	115V	PVDF	TFE	CER	Standard	**K3KTC1**	$195.00
LC03SA-KTC1-500	$595.00	Manual	115V	PVDF	TFE	CER	5 Func. Valve	**K3KTC1**	$195.00
LC03SA-PHC1-XXX	$430.00	Manual	115V	GFPPL	TFE	CER	Standard	**K3PHC1**	$86.00
LC03SA-PHC1-500	$516.00	Manual	115V	GFPPL	CSPE	CER	5 Func. Valve	**K3PHC1**	$86.00
LC03SB-PHC1-XXX	$456.00	Manual	230V	GFPPL	CSPE	CER	Standard	**K3PHC1**	$86.00
LC03SA-PTC1-XXX	$443.00	Manual	115V	GFPPL	TFE	CER	Standard	**K3PTC1**	$99.00
LC03SB-PTC1-XXX	$470.00	Manual	230V	GFPPL	TFE	CER	Standard	**K3PTC1**	$99.00
LC03S2-PTC1-CZXXX	$470.00	Manual	230V	GFPPL	TFE	CER	Standard	**K3PTC1**	$99.00
LC03SA-VHC1-XXX	$430.00	Manual	115V	PVC	CSPE	CER	CE Approval	**K3VHC1**	$86.00
LC03SA-VHC1-500	$516.00	Manual	115V	PVC	CSPE	CER	5 Func. Valve	**K3VHC1**	$86.00
LC03SB-VHC1-XXX	$456.00	Manual	230V	PVC	CSPE	CER	Standard	**K3VHC1**	$86.00
LC03SA-VTC1-XXX	$443.00	Manual	115V	PVC	TFE	CER	Standard	**K3VTC1**	$99.00
LC03SA-VTC1-500	$530.00	Manual	115V	PVC	TFE	CER	5 Func. Valve	**K3VTC1**	$99.00
LC03SB-VTC1-500	$556.00	Manual	230V	PVC	TFE	CER	5 Func. Valve	**K3VTC1**	$99.00
LC03SB-VTC1-XXX	$470.00	Manual	230V	PVC	TFE	CER	Standard	**K3VTC1**	$99.00
LC03S2-VTC1-CZXXX	$470.00	Manual	230V	PVC	TFE	CER	CE Approval	**K3VTC1**	$99.00
LC03SA-VTCJ-XXX	$443.00	Manual	115V	PVC	TFE	CER	Q.P./Standard	**K3VTCJ**	$99.00
LC03SB-VTCJ-XXX	$470.00	Manual	230V	PVC	TFE	CER	Q.P./Standard	**K3VTCJ**	$99.00
LC03SA-VVC1-XXX	$438.00	Manual	115V	PVC	Viton	CER	Standard	**K3VVC1**	$96.00
LC03SA-VVC1-055	$438.00	Manual	115V	PVC	Viton	CER	Blk Disc. Tube	**K3VVC1**	$96.00
LC03SA-VVC9-XXX	$564.00	Manual	115V	PVC	Viton	CER	Degas/Standard	**K3VVC9**	$215.00
LC03SA-VVC9-055	$564.00	Manual	115V	PVC	Viton	CER	Degas/Blk Disc Tube	**K3VVC9**	$215.00
LC03SB-VVC9-XXX	$688.00	Manual	230V	PVC	Viton	CER	Degas/Standard	**K3VVC9**	$15.00
LC03SB-VVC9-055	$591.00	Manual	230V	PVC	Viton	CER	Degas/Blk Disc Tube	**K3VVC9**	$215.00

Series C - Electronic Metering Pumps

LC04	MAX FLOW RATE: 1.00 gph / 24 gpd (3.8 lph) max pressure: 80 PSI (5.6 BAR)								
Model Number	**List Price**	**Controls**	**Voltage**	**Head Fittings**	**Seats / O-Rings**	**Balls**	**Options**	**KOPkit #**	**List Price**
LC04SA-KTC1-XXX	$508.00	Manual	115V	PVDF	TFE	CER	Standard	**K4KTC1**	$210.00
LC04SA-KTC1-500	$595.00	Manual	115V	PVDF	TFE	CER	5 Func. Valve	**K4KTC1**	$210.00
LC04SB-KTC1-XXX	$535.00	Manual	230V	PVDF	TFE	CER	Standard	**K4KTC1**	$210.00
LC04SA-KTT1-XXX	$508.00	Manual	115V	PVDF	TFE	TFE	Standard	**K4KTT1**	$210.00
LC04SB-KTT1-XXX	$535.00	Manual	230V	PVDF	TFE	TFE	Standard	**K4KTT1**	$210.00
LC04SA-PHC1-XXX	$430.00	Manual	115V	GFPPL	CSPE	CER	Standard	**K4PHC1**	$100.00
LC04SB-PHC1-XXX	$456.00	Manual	230V	GFPPL	CSPE	CER	Standard	**K4PHC1**	$100.00
LC04S2-PHC1-CZXXX	$456.00	Manual	230V	GFPPL	CSPE	CER	CE Approval	**K4PHC1**	$100.00
LC04SA-PTC1-XXX	$443.00	Manual	115V	GFPPL	TFE	CER	Standard	**K4PTC1**	$114.00
LC04SB-PTC1-XXX	$470.00	Manual	230V	GFPPL	TFE	CER	Standard	**K4PTC1**	$114.00
LC04SA-VHC1-XXX	$430.00	Manual	115V	PVC	CSPE	CER	Standard	**K4VHC1**	$100.00
LC04SA-VHC1-500	$516.00	Manual	115V	PVC	CSPE	CER	5 Func. Valve	**K4VHC1**	$100.00
LC04SB-VHC1-XXX	$456.00	Manual	230V	PVC	CSPE	CER	Standard	**K4VHC1**	$100.00
LC04SB-VHC1-055	$456.00	Manual	230V	PVC	CSPE	CER	Blk Disc. Tube	**K4VHC1**	$100.00
LC04SA-VTC1-XXX	$443.00	Manual	115V	PVC	TFE	CER	Standard	**K4VTC1**	$114.00
LC04SA-VTC1-500	$530.00	Manual	115V	PVC	TFE	CER	5 Func. Valve	**K4VTC1**	$114.00
LC04SB-VTC1-500	$556.00	Manual	230V	PVC	TFE	CER	5 Func. Valve	**K4VTC1**	$114.00
LC04SB-VTC1-XXX	$470.00	Manual	230V	PVC	TFE	CER	Standard	**K4VTC1**	$114.00
LC04SB-VTC1-055	$470.00	Manual	230V	PVC	TFE	CER	Blk Disc. Tube	**K4VTC1**	$114.00
LC04SA-VVC1-XXX	$438.00	Controls	115V	PVC	Viton	CER	Standard	**K4VVC1**	$110.00
LC04SA-VVC1-500	$523.00	Controls	115V	PVC	Viton	CER	5 Func. Valve	**K4VVC1**	$110.00
LC04SB-VVC1-XXX	$464.00	Controls	230V	PVC	Viton	CER	Standard	**K4VVC1**	$110.00
LC04SA-VVC9-XXX	$564.00	Manual	115V	PVC	Viton	CER	Degas/Standard	**K4VVC9**	$230.00
LC04SA-VVC9-055	$564.00	Manual	115V	PVC	Viton	CER	Degas/Blk Disc Tube	**K4VVC9**	$230.00
LC04SB-VVC9-XXX	$591.00	Manual	230V	PVC	Viton	CER	Degas/Standard	**K4VVC9**	$230.00

Series C - Electronic Metering Pumps

LC54	MAX FLOW RATE: 1.25 gph / 30 gpd (4.7 lph) max pressure: 80 PSI (5.6 BAR)								
Model Number	**List Price**	**Controls**	**Voltage**	**Head Fittings**	**Seats / O-Rings**	**Balls**	**Options**	**KOPkit #**	**List Price**
LC54EA-VHC1-XXX	$545.00	Pace w/Auto/Man.	115V	PVC	CSPE	CER	Standard	**K4VHC1**	$100.00
LC54E2-VHC1-CZXXX	$571.00	Pace w/Auto/Man.	230V	PVC	CSPE	CER	CE Approval	**K4VHC1**	$100.00
LC54EA-VTC1-XXX	$558.00	Pace w/Auto/Man.	115V	PVC	TFE	CER	Standard	**K4VTC1**	$114.00
LC54E2-VTC1-CZXXX	$585.00	Pace w/Auto/Man.	230V	PVC	TFE	CER	CE Approval	**K4VTC1**	$114.00
LC54EA-VVC9-XXX	$679.00	Pace w/Auto/Man.	115V	PVC	Viton	CER	Degas/Standard	**K4VVC9**	$230.00
LC54E2-VVC9-CZXXX	$706.00	Pace w/Auto/Man.	230V	PVC	Viton	CER	Degas/CE Approval	**K4VVC9**	$230.00
LC54GA-VHC1-XXX	$545.00	Pace w/ Prime	115V	PVC	CSPE	CER	Standard	**K4VHC1**	$100.00
LC54GB-VHC1-XXX	$571.00	Pace w/ Prime	230V	PVC	CSPE	CER	Standard	**K4VHC1**	$100.00
LC54GA-VVC9-XXX	$679.00	Pace w/ Prime	115V	PVC	Viton	CER	Degas/Standard	**K4VVC9**	$230.00
LC54SA-KTC1-XXX	$508.00	Manual	115V	PVDF	TFE	CER	Standard	**K4KTC1**	$210.00
LC54SA-KTC1-130	$646.00	Manual	115V	PVDF	TFE	CER	PVDF Tube	**K4KTC1**	$210.00
LC54SA-KTC1-500	$595.00	Manual	115V	PVDF	TFE	CER	5 Func. Valve	**K4KTC1**	$210.00
LC54SB-KTC1-130	$672.00	Manual	230V	PVDF	TFE	CER	PVDF Tube	**K4KTC1**	$210.00
LC54SA-PHC1-XXX	$430.00	Manual	115V	GFPPL	CSPE	CER	Standard	**K4PHC1**	$100.00
LC54SA-PHC1-500	$516.00	Manual	115V	GFPPL	CSPE	CER	5 Func. Valve	**K4PHC1**	$100.00
LC54SB-PHC1-XXX	$456.00	Manual	230V	GFPPL	CSPE	CER	Standard	**K4PHC1**	$100.00
LC54S2-PHC1-CZXXX	$456.00	Manual	230V	GFPPL	CSPE	CER	CE Approval	**K4PHC1**	$100.00
LC54SA-PTC1-XXX	$443.00	Manual	115V	GFPPL	TFE	CER	Standard	**K4PTC1**	$114.00
LC54SA-PTC1-500	$530.00	Manual	115V	GFPPL	TFE	CER	5 Func. Valve	**K4PTC1**	$114.00
LC54SB-PTC1-XXX	$470.00	Manual	230V	GFPPL	TFE	CER	Standard	**K4PTC1**	$114.00
LC54S2-PTC1-CZXXX	$470.00	Manual	230V	GFPPL	TFE	CER	CE Approval	**K4PTC1**	$114.00
LC54SA-VHC1-XXX	$430.00	Manual	115V	PVC	CSPE	CER	Standard	**K4VHC1**	$100.00
LC54SA-VHC1-055	$430.00	Manual	115V	PVC	CSPE	CER	Blk Disc. Tube	**K4VHC1**	$100.00
LC54SA-VHC1-500	$516.00	Manual	115V	PVC	CSPE	CER	5 Func. Valve	**K4VHC1**	$100.00
LC54SB-VHC1-XXX	$456.00	Manual	230V	PVC	CSPE	CER	Standard	**K4VHC1**	$100.00
LC54SB-VHC1-055	$456.00	Manual	230V	PVC	CSPE	CER	Blk Disc. Tube	**K4VHC1**	$100.00
LC54SA-VHC9-XXX	$557.00	Manual	115V	PVC	CSPE	CER	Degas/Standard	**K4VHC9**	$220.00
LC54SA-VHC9-055	$557.00	Manual	115V	PVC	CSPE	CER	Degas/Blk Disc Tube	**K4VHC9**	$220.00
LC54SB-VHC9-055	$584.00	Manual	230V	PVC	CSPE	CER	Degas/Blk Disc Tube	**K4VHC9**	$220.00
LC54SA-VHCA-XXX	$430.00	Manual	115V	PVC	CSPE	CER	Standard	**K4VHCA**	$100.00
LC54SA-VHCA-055	$430.00	Manual	115V	PVC	CSPE	CER	Blk Disc. Tube	**K4VHCA**	$100.00
LC54SB-VHCA-055	$456.00	Manual	230V	PVC	CSPE	CER	Blk Disc. Tube	**K4VHCA**	$100.00
LC54SA-VTC1-XXX	$443.00	Manual	115V	PVC	TFE	CER	Standard	**K4VTC1**	$114.00
LC54SA-VTC1-055	$443.00	Manual	115V	PVC	TFE	CER	Blk Disc. Tube	**K4VTC1**	$114.00
LC54SB-VTC1-XXX	$470.00	Manual	230V	PVC	TFE	CER	Standard	**K4VTC1**	$114.00
LC54SB-VTC1-055	$470.00	Manual	230V	PVC	TFE	CER	Blk Disc. Tube	**K4VTC1**	$114.00
LC54S2-VTC1-CZXXX	$470.00	Manual	230V	PVC	TFE	CER	CE Approval	**K4VTC1**	$114.00
LC54SA-VVC1-XXX	$438.00	Manual	115V	PVC	Viton	CER	Standard	**K4VVC1**	$110.00
LC54SA-VVC1-055	$438.00	Manual	115V	PVC	Viton	CER	Blk Disc. Tube	**K4VVC1**	$110.00
LC54SA-VVC1-500	$523.00	Manual	115V	PVC	Viton	CER	5 Func. Valve	**K4VVC1**	$110.00
LC54SB-VVC1-XXX	$464.00	Manual	230V	PVC	Viton	CER	Standard	**K4VVC1**	$110.00
LC54SA-VVC9-XXX	$564.00	Manual	115V	PVC	Viton	CER	Degas/Standard	**K4VVC9**	$230.00
LC54SA-VVC9-055	$564.00	Manual	115V	PVC	Viton	CER	Degas/Blk Disc Tube	**K4VVC9**	$230.00
LC54SB-VVC9-XXX	$591.00	Manual	230V	PVC	Viton	CER	Degas/Standard	**K4VVC9**	$230.00
LC54SB-VVC9-055	$591.00	Manual	230V	PVC	Viton	CER	Degas/Blk Disc Tube	**K4VVC9**	$230.00

CHEM·TECH Series XP - Peristaltic Pumps

- 230V 50/60Hz input power, change the letter "L" to the letter "H" in position six (6) of the model number.
- 230V 50Hz input power with Grounded Right Angle European Plug, change the letter "L" to the letter "R" in position six (6) of the model number.

XP004 — MAX FLOW RATE: 4 gpd (0.6 lph) Speed (RPM) 30

Model Number	List Price	Max Press	Bar	Voltage	Controls	Tubing	KOPkit #	List Price
XP004DFLX	$689.00	125	8.6	12V	On/Off with Timer	Low Pressure Norprene	NCKA2HPAP1	$124.00
XP004LAHX	$655.00	125	8.6	115V	On/Off with Timer	High Pressure Norprene	NCKA2HPAP1	$124.00
XP004HAHX	$655.00	125	8.6	230V	On/Off with Timer	High Pressure Norprene	NCKA2HPAP1	$124.00
XP004LALX	$655.00	80	5.5	115V	On/Off with Timer	Low Pressure Norprene	NCKA2LPAP1	$124.00
XP004RALX	$678.00	80	5.5	230V/50Hz	On/Off with Timer	Low Pressure Norprene	NCKA2LPAP1	$124.00
XP004HALX	$655.00	80	5.5	230V	On/Off with Timer	Low Pressure Norprene	NCKA2LPAP1	$124.00
XP004LFLX	$453.00	80	5.5	115V	Fixed On / Off	Low Pressure Norprene	NCKA2LPAP1	$124.00
XP004HFLX	$453.00	80	5.5	230V	Fixed On / Off	Low Pressure Norprene	NCKA2LPAP1	$124.00

XP007 — MAX FLOW RATE: 7 gpd (1.1 lph) Speed (RPM) 50

Model Number	List Price	Max Press	Bar	Voltage	Controls	Tubing	KOPkit #	List Price
XP007L8HX	$591.00	125	8.6	115V	7 Day - 8 Event Timer - Fixed Rate	High Pressure Norprene	NCKA2HPAP1	**$124.00**
XP007LAHX	$655.00	125	8.6	115V	On/Off with Timer	High Pressure Norprene	NCKA2LPAP1	**$124.00**
XP007HAHX	$655.00	125	8.6	230V	On/Off with Timer	High Pressure Norprene	NCKA2HPAP1	**$124.00**
XP007LFHX	$453.00	125	8.6	115V	Fixed On / Off	High Pressure Norprene	NCKA2HPAP1	**$124.00**
XP007HFHX	$453.00	125	8.6	230V	Fixed On / Off	High Pressure Norprene	NCKA2HPAP1	**$124.00**

XP009 — MAX FLOW RATE: 9 gpd (1.4 lph) Speed (RPM) 30

Model Number	List Price	Max Press	Bar	Voltage	Controls	Tubing	KOPkit #	List Price
XP009L2HX	$686.00	110	7.6	115V	Pulse Input, .2 to 10 Second Timer	High Pressure Norprene	NCKA3HPAP1	$124.00
XP009LAHX	$655.00	110	7.6	115V	On/Off with Timer	High Pressure Norprene	NCKA3HPAP1	$124.00
XP009HAHX	$655.00	110	7.6	230V	On/Off with Timer	High Pressure Norprene	NCKA3HPAP1	$124.00
XP009LFHX	$453.00	110	7.6	115V	Fixed On / Off	High Pressure Norprene	NCKA3HPAP1	$124.00
XP009HFHX	$453.00	110	7.6	230V	Fixed On / Off	High Pressure Norprene	NCKA3HPAP1	$124.00

XP014 — MAX FLOW RATE: 14 gpd (2.3 lph) Speed (RPM) 30

Model Number	List Price	Max Press	Bar	Voltage	Controls	Tubing	KOPkit #	List Price
XP014L8FX	$651.00	40	2.8	115V	7 Day - 8 Event Timer - Fixed Rate	Fluran, Acid resistant	NCKA4LPAP1	$124.00
XP014LFHX	$453.00	100	5.9	115V	Fixed On / Off	High Pressure Norprene	NCKA4HPAP1	$124.00

CHEM-TECH Series XP - Peristaltic Pumps

XP015	MAX FLOW RATE: 15 gpd (2.4 lph) Speed (RPM) 50							
Model Number	**List Price**	**Max Press**	**Bar**	**Voltage**	**Controls**	**Tubing**	**KOPkit #**	**List Price**
XP015L5HX	$686.00	110	7.6	115V	Dry Contact - Adjustable	High Pressure Norprene	**NCKA3HPAP1**	$124.00
XP015L8HX	$591.00	110	7.6	230V	7 Day - 8 Event Timer - Fixed Rate	High Pressure Norprene	**NCKA3HPAP1**	$124.00
XP015LA3X	$697.00	70	4.8	115V	On/Off with Timer	Low Pressure Norprene	**NCKA3LPAP1**	$124.00
XP015LAHX	$655.00	110	7.6	115V	On/Off with Timer	High Pressure Norprene	**NCKA3HPAP1**	$124.00
XP015HAHX	$655.00	110	7.6	230V	On/Off with Timer	High Pressure Norprene	**NCKA3HPAP1**	$124.00
XP015LALX	$655.00	70	4.8	115V	On/Off with Timer	Low Pressure Norprene	**NCKA3LPAP1**	$124.00
XP015HALX	$655.00	70	4.8	230V	On/Off with Timer	Low Pressure Norprene	**NCKA3LPAP1**	$124.00
XP015LFHX	$453.00	110	7.6	115V	Fixed On / Off	High Pressure Norprene	**NCKA3HPAP1**	$124.00
XP015HFHX	$453.00	110	7.6	230V	Fixed On / Off	High Pressure Norprene	**NCKA3HPAP1**	$124.00

XP023	MAX FLOW RATE: 23 gpd (3.6 lph) Speed (RPM) 50							
Model Number	**List Price**	**Max Press**	**Bar**	**Voltage**	**Controls**	**Tubing**	**KOPkit #**	**List Price**
XP023L2HX	$686.00	100	5.9	115V	Pulse Input, .2 to 10 Second Timer	High Pressure Norprene	**NCKA4HPAP1**	$124.00
XP023L8HX	$591.00	100	5.9	115V	7 Day - 8 Event Timer - Fixed Rate	High Pressure Norprene	**NCKA4HPAP1**	$124.010
XP023LA4X	$697.00	100	5.9	115V	On/Off with Timer	High Pressure Norprene	**NCKA4HPAP1**	$124.00
XP023LAHX	$655.00	100	5.9	115V	On/Off with Timer	High Pressure Norprene	**NCKA4HPAP1**	$124.00
XP023HAHX	$655.00	100	5.9	230V	On/Off with Timer	High Pressure Norprene	**NCKA4HPAP1**	$124.00
XP023LFHX	$453.00	100	5.9	115V	Fixed On / Off	High Pressure Norprene	**NCKA4HPAP1**	$124.00
XP023HFHX	$453.00	100	5.9	230V	Fixed On / Off	High Pressure Norprene	**NCKA4HPAP1**	$124.00
XP023LFLX	$453.00	100	5.9	115V	Fixed On / Off	Low Pressure Norprene	**NCKA4LPAP1**	$124.00

XP030	MAX FLOW RATE: 30 gpd (4.7 lph) Speed (RPM) 30							
Model Number	**List Price**	**Max Press**	**Bar**	**Voltage**	**Controls**	**Tubing**	**KOPkit #**	**List Price**
XP030L1HX	$686.00	80	5.5	115V	Pulse Input, .1 to 1 Second Timer	High Pressure Norprene	**NCKA6HPAP1**	$124.00
XP030H1HX	$686.00	80	5.5	230V	Pulse Input, .1 to 1 Second Timer	High Pressure Norprene	**NCKA6HPAP1**	$124.00
XP030L2HX	$686.00	80	5.5	115V	Pulse Input, .2 to 10 Second Timer	High Pressure Norprene	**NCKA6HPAP1**	$124.00
XP030L4HX	$686.00	80	5.5	115V	Dry Contact - Fixed Rate	High Pressure Norprene	**NCKA6HPAP1**	$124.00
XP030LA4X	$697.00	80	5.5	115V	On/Off with Timer	High Pressure Norprene	**NCKA6HPAP1**	$124.00
XP030HA4X	$697.00	80	5.5	230V	On/Off with Timer	High Pressure Norprene	**NCKA6HPAP1**	$124.00
XP030LAHX	$655.00	80	5.5	115V	On/Off with Timer	High Pressure Norprene	**NCKA6HPAP1**	$124.00
XP030HAHX	$655.00	80	5.5	230V	On/Off with Timer	High Pressure Norprene	**NCKA6HPAP1**	$124.00
XP030LFHX	$453.00	80	5.5	115V	Fixed On / Off	High Pressure Norprene	**NCKA6HPAP1**	$124.00
XP030HFHX	$453.00	80	5.5	230V	Fixed On / Off	High Pressure Norprene	**NCKA6HPAP1**	$124.00

CHEM·TECH Series XP - Peristaltic Pumps

XP050	MAX FLOW RATE: 50 gpd (7.9 lph) Speed (RPM) 50							
Model Number	**List Price**	**Max Press**	**Bar**	**Voltage**	**Controls**	**Tubing**	**KOPkit #**	**List Price**
XP050L3LX	$686.00	40	2.8	115V	Pulse Input, 1 to 60 Second Timer	Low Pressure Norprene	**NCKA6LPAP1**	$124.00
XP050LA3X	$697.00	40	2.8	115V	On/Off with Timer	Low Pressure Norprene	**NCKA6LPAP1**	$124.00
XP050LALX	$655.00	40	2.8	115V	On/Off with Timer	Low Pressure Norprene	**NCKA6LPAP1**	$124.00
XP050HALX	$655.00	40	2.8	230V	On/Off with Timer	Low Pressure Norprene	**NCKA6LPAP1**	$124.00

XP080	MAX FLOW RATE: 80 gpd (12.6 lph) Speed (RPM) 50							
Model Number	**List Price**	**Max Press**	**Bar**	**Voltage**	**Controls**	**Tubing**	**KOPkit #**	**List Price**
XP080LA3X	$697.00	25	1.7	115V	On/Off with Timer	Low Pressure Norprene	**NCKA8LPAP1**	$124.00
XP080LALX	$655.00	25	1.7	115V	On/Off with Timer	Low Pressure Norprene	**NCKA8LPAP1**	$124.00
XP080HALX	$655.00	25	1.7	230V	On/Off with Timer	Low Pressure Norprene	**NCKA8LPAP1**	$124.00
XP080LFLX	$453.00	25	1.7	115V	Fixed On / Off	Low Pressure Norprene	**NCKA8LPAP1**	$124.00

DOMESTIC EQUIPMENT WARRANTY

WARRANTY
Lakewood Instruments LLC warrants all equipment manufactured by us to be free from defects in workmanship or material for two (2) years from date of sale. If our equipment is found to be defective within two (2) years from the date of sale, Lakewood Instruments LLC will, at its option, repair or replace said equipment.

WARRANTY EXCLUSIONS AND LIMITATIONS
Lakewood Instruments LLC only performs warranty repairs and replacements at its own factory service facilities. Lakewood Instruments LLC does not warranty the suitability of the equipment for a particular application or the merchantability of the equipment.

All pH electrodes and other electrodes or sensor assemblies are warranted for twelve (12) months from the date of sale, regardless of installation date, for cooling water and boiler applications only. For all other applications, Lakewood Instruments LLC warrants only that the sensor will function correctly at time of installation.

Controllers, instruments, sensors, valves, chemical pumps or other equipment not manufactured by Lakewood Instruments LLC are covered ONLY by its manufacturer's warranty.

Repaired or replaced equipment warranties are limited to the term of the original equipment.

Lakewood Instruments LLC assumes no liability for damage or loss caused by misuse or misapplication of the equipment. Lakewood Instruments LLC accepts no consequential loss for use of its equipment. Lakewood Instruments LLC warranty is voided by improper installation or by unauthorized repairs or field modification of the equipment or parts.

This warranty is limited to products sold and installed in the United States.

RETURN GOODS AUTHORIZATION (RGA)
No return will be accepted without a return number from Lakewood Instruments LLC. The RGA will not be issued without the correct serial number and model number. All items must be shipped Freight Prepaid. Original Packing is preferred method of return. If you choose to re-pack the returned items, any damage that results in shipping will be billed to the repair/evaluation purchase order. Receipt and use of this form does not guarantee full or partial credit will be issued.

All returns should be sent to the attention of the TECHNICAL SERVICE DEPARTMENT. When returning any item, be sure to include the RGA number and a complete DESCRIPTION of what appears to be wrong. Include the name of the contact person, their telephone number and a return shipping address. All replacements will be sent to you via UPS at no charge.

FREIGHT DAMAGE OR LOSS
Inspect shipments upon receipt. If there is any damage, notify the delivering carrier and file a claim. If a damage repair or replacement estimate is needed, notify us. We will forward such information to the carrier specified. All shipments are FCA Milwaukee, WI 53224.

CREDITS AND RESTOCKING
Credits for returned material will be issued solely at the discretion of Lakewood Instruments LLC. No credits will be issued after one (1) year from the date of sale. Credit for returned material is subject to a 20% restocking charge. Only standard manufacture items will be accepted for restocking. Custom products or Engineered Systems will not be accepted. All parts returned for re-stock credit must be received at our facility in a salable condition. Any visual or physical damage that has occurred in shipping or during prior installation will be billed to the repair/evaluation purchase order.

All pH and ORP probes are to have the probe tips sealed in such a way that the tips will remain wetted for the duration of shipping and evaluation. Failure to do so will result in the full LIST purchase price of replacement probes billed to the repair/evaluation purchase order.

Copyright 2017 © Lakewood Instruments, LLC.
Printed in the USA, Rev A.4

For more information:
Call toll free in the USA (800) 228-0839
Email at csd@lakewoodinstruments.com
Or visit us at www.lakewoodinstruments.com

Manufactured in the USA

Lakewood Instruments, LLC.
7838 North Faulkner Road
Milwaukee, WI 53224
USA

(414) 355-2807 Phone
(414) 355-3508 Fax

NOTES:

1. This price list supersedes all previous price lists.
2. Prices include standard packaging for air, overland USA truck, or containerized ocean freight.
3. Prices are FOB Factory, Milwaukee, Wisconsin 53224 USA
4. Prices are subject to change without notice.
5. All prices in U.S. dollars (USD$).
6. Price List effective January 1, 2017.